Product leaflet

FilterCart

FilterCart+ mobile filter unit for intermittent to light duty welding and extraction applications.



This content is protected under copyright law, furnished for informational use only, and subject to change without notice. © Nederman Holding AB

FilterCart

- Original extraction hood with - or without LED lamp - for better working conditions.
- Long lasting, disposable nanofiber filter with large filter surface of 30 m2 (323 ft2)
- HEPA 13 filter optional available
- Filter efficiency F9 (EN779), MERV 14 (ASHRAE 52.2) FilterCart Advanced. Filter efficiency MERV 11 (FilterCart Original)
- Meets the Ecodesign Regulation for integrated fans (Ecodesign Regulation 2024/1834).

The FilterCart+ is a light-weight, and easy to manoeuvre mobile unit. Used for extraction of dust and weld fumes, includes an Original extraction arm for easy and reliable hood positioning. The arm is already fitted to the unit enabling a fast and easy setup.

FilterCart+ meets the Ecodesign Regulation for integrated fans (Ecodesign Regulation 2024/1834).

The disposable nanofiber filter offers both significantly longer filter life and higher efficiency than previous versions of the FilterCart.

This content is protected under copyright law, furnished for informational use only, and subject to change without notice. © Nederman Holding AB

FilterCart

Certifications	CE
Noise level (dB(A))	73
Protection class	IP42
Filter efficiency (%)	99
Installation	Indoor
Material	Housing in roto moulded plastic. Extraction arm in PVC hose and aluminium frame. Fan in steel and aluminium.
Suitable for combustible dust	False
Material recycling (%)	99
Application	Fumes
Extraction arm diameter (mm)	160
Airflow (m^3/h)	1050
Frequency (Hz)	50
No of phases	1
Filter type	Cartridge
Number of filter elements	1
Weight (kg)	73
Filter cleaning method	One way filter
Power (kW)	0,75
Extraction method	extraction arm
Filter change indication	False
Filter area (m^2)	30

This content is protected under copyright law, furnished for informational use only, and subject to change without notice. © Nederman Holding AB

Models

	Item no	Arm length (m)	Power voltage (V)	Electric plug	Max airflow (m³/h)
	12634845[1]	3	230	Euro (CEE 7/2 P+E)	1050
	12634945[2]	2	110	UK	
	12635045[3]	3	110	UK	
	12635145[3]	2	240	UK	
	12635245[3]	3	240	UK	
	12635545[4]	3	110	UK	
	12636145[2]	3	230	UK	

[1] Without lamp. Filter class - F9 (EN779), MERV 14 (ASHRAE 52.2). Note!! When using a Filtercart to extract fumes from a spark generating process such as welding, we recommend the installation of a hood spark arrester, part number 10551335.
[2] Filter class - F9 (EN779), MERV 14 (ASHRAE 52.2) Note!! When using a Filtercart to extract fumes from a spark generating process such as welding, we recommend the installation of a hood spark arrester, part number 10551335.
[3] Filter class - F9 (EN779), MERV 14 (ASHRAE 52.2) Note!! When using a Filtercart to extract fumes from a spark generating process such as welding, we recommend the installation of a hood spark arrester, part number 10551335.
[4] Without lamp. Filter class - F9 (EN779), MERV 14 (ASHRAE 52.2) Note!! When using a Filtercart to extract fumes from a spark generating process such as welding, we recommend the installation of a hood spark arrester, part number 10551335.

This content is protected under copyright law, furnished for informational use only, and subject to change without notice. © Nederman Holding AB

Accessories

	Accessory	Item no
	LED 24V, 5W/6VA	10376969
	Spark protection for Original hood and for NEX MD hood	10551335
	Precote 5 pcs	12374548
	Filter HEPA H13-FC Original and W3	12374016
	Filter FC-30 Nanofiber, High Efficiency	12377253
	HEPA filter H14-FilterCart (excl. 12377290 spacer kit)	12377296
	Kit spacer FCart filter H14 , 4-p	12377290

This content is protected under copyright law, furnished for informational use only, and subject to change without notice. © Nederman Holding AB

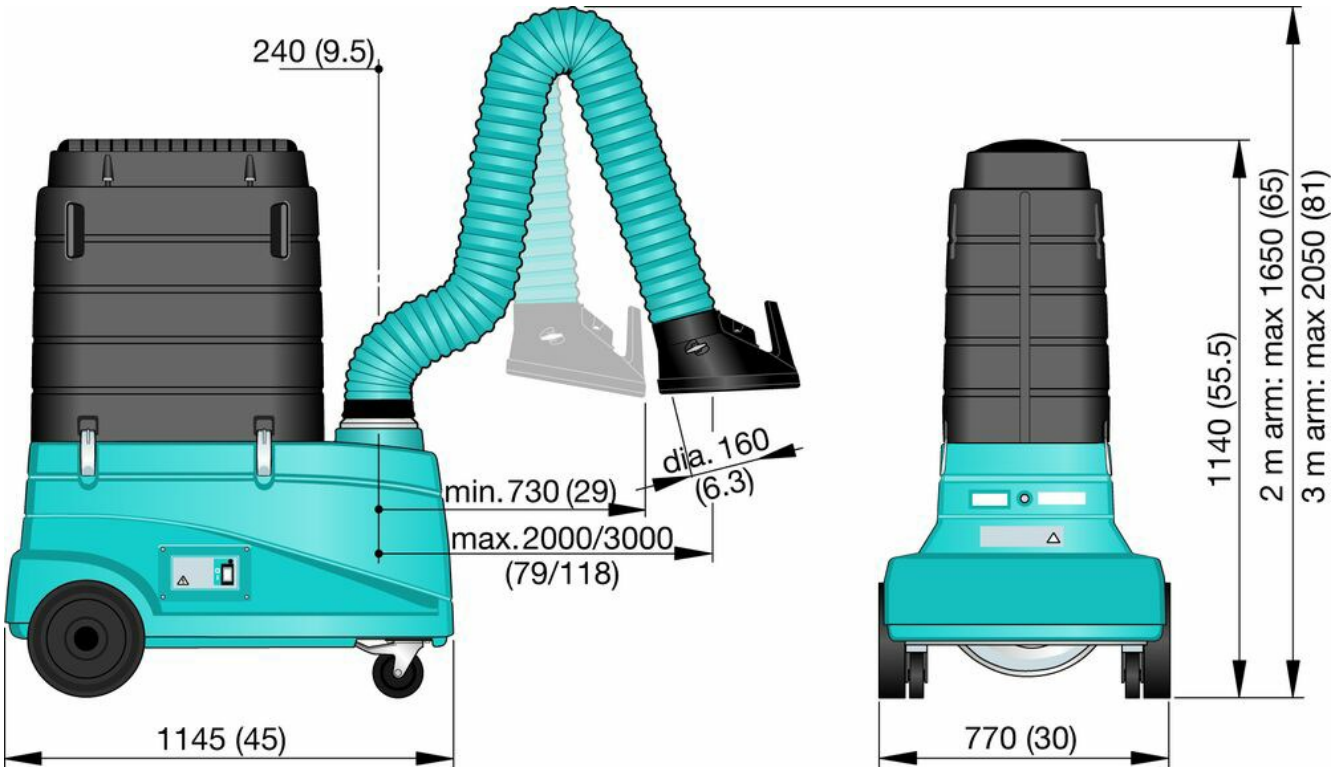

This content is protected under copyright law, furnished for informational use only, and subject to change without notice. © Nederman Holding AB