Product leaflet

FilterBox 10A

Automatically cleaned for light to medium welding fumes & dust applications



This content is protected under copyright law, furnished for informational use only, and subject to change without notice. © Nederman Holding AB

FilterBox 10A

- Automatically operated, mechanical and pneumatic filter cleaning for long filter life.
- LCD panel with operating status and menu system for parameter setup and settings.
- Possibility to connect a welding sensor clamp to automatically start the fan.
- Automatic damper preventing dust from leaking out while cleaning. Dust free filter replacement and emptying of dust bin.
- Filter efficiency M6 (EN779), MERV 11 (ASHRAE 52.2, 2017). Approved for welding fumes category W3 according to EN 15012-1, third party tested.+F5:F11

The FilterBox 10A is equipped with a N24 fan for a maximum air flow capacity of 1 000 m3/h (600 CFM) and is ideal for light to medium frequency dust or fume applications

The unit has an advanced filter control system indicating the pressure drop with a series of LED's as well as on the LCD display. When the air flow is too low an audial alarm precedes the automatic, motorized compressed air cleaning sequence. Depending on the model, it is equipped with mechanical cleaning for dust applications or a combination of mechanical and compressed air cleaning for welding fumes.

For welding applications, compressed air cleaning is required.

An integrated silencer reduces noise from the fan and outlet air. Additional protection from harmful particles is provided if a HEPA filter is installed (optional). FilterBox 10A is available as a mobile unit on wheels or a fixed mount unit.

Filterbox 10A is suitable for welding applications such as TIG, MIG, MAG (excluding high alloy), as well as for grinding.

Note! FilterBox is not for use in environments where combustible dust or gases are present, and it is not for use in filtering combustible dust or gases.

This content is protected under copyright law, furnished for informational use only, and subject to change without notice. © Nederman Holding AB

FilterBox 10A

Certifications	CE
Noise level (dB(A))	66
Protection class	IP 54
Filter efficiency (%)	99
Compressed air requirement	DIN ISO 8573-1, class 5/5/4 (7 bar)
Installation	Indoor
Material	Casing in rotomoulded plastic
Dustbin volume (l)	15
Extraction arm diameter (mm)	160
Airflow (m^3/h)	1000
Filter Area (m^2)	13
Frequency (Hz)	50
Filter type	Cartridge
Number of filter elements	1
Filter material	Polyester PW13
Electric plug	without
Filter cleaning method	Mechanical, Compressed air
Extraction method	extraction arm
Filter change indication	False
Fume and dust application (application type)	Light-Medium

This content is protected under copyright law, furnished for informational use only, and subject to change without notice. © Nederman Holding AB

Models

	Item no	Arm length (m)	Power voltage (V)	No of phases	Weight (kg)	Power (kW)
	12655463	3	400	3	102	0,9
	12655563	3	400	3	99	0,9
	12655663	3	230	1	102	0,75
	12655763	3	230	1	99	0,75
	12655863	3	110	1	102	0,75
	12655963	3	110	1	99	0,75
	12685063	Without	400	3	99	0,9
	12686763	Without	400	3	102	0,9

This content is protected under copyright law, furnished for informational use only, and subject to change without notice. © Nederman Holding AB

Accessories

	Accessory	Item no
	Outlet with duct connection D=200mm	12376749
	Spotlight original, (LED) 24V, 5W	12376616
	Spark protection for Original hood and for NEX MD hood	10551335
	LED light/fan switch for Original hood	10376922
	Filter-PW-FB-13	12332672
	Filter PWA-FB-15	12371412
	HEPA filter H13 10m2 Filterbox	12376615
	Bags for Filterbox dust bin, 10pcs	12376618
	HEPA filter H14 10m2 Filterbox	12376756
	Sensor clamp	14372199
	Twin Module blue	12376801
	Filter NANO-FB-17	12377251
	FilterBox ePTFE High Efficiency Replacement filter. 13m² (140 ft2).	12377252

This content is protected under copyright law, furnished for informational use only, and subject to change without notice. © Nederman Holding AB

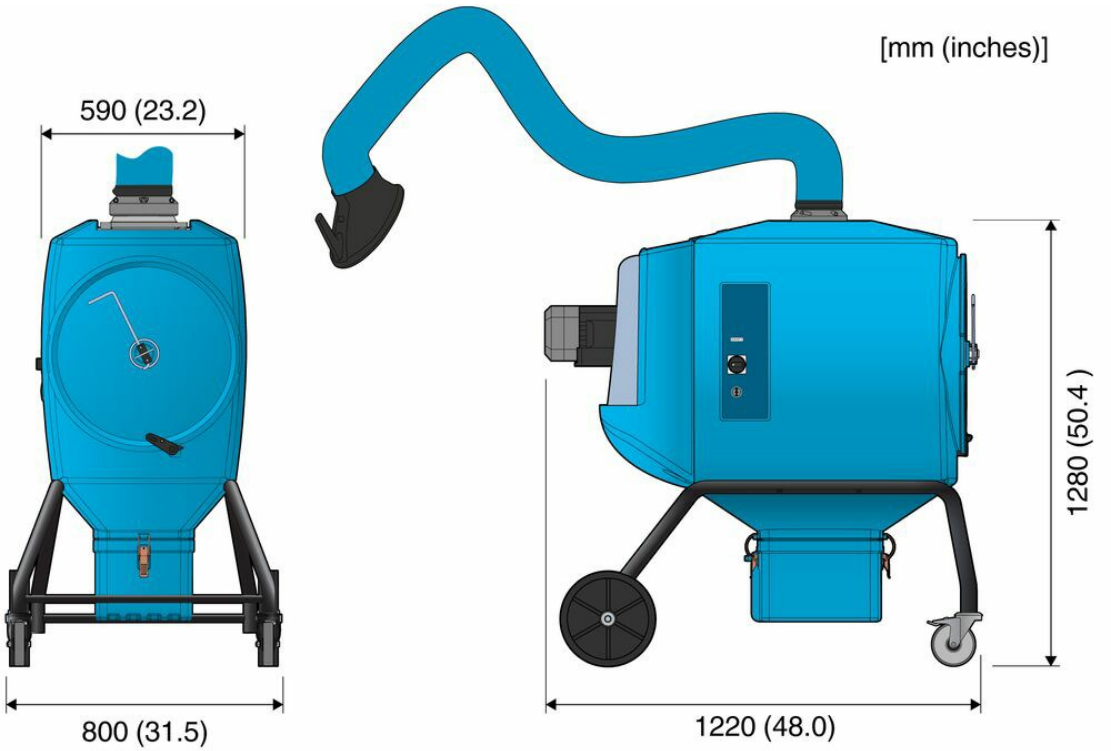

FilterBox 10A mobile

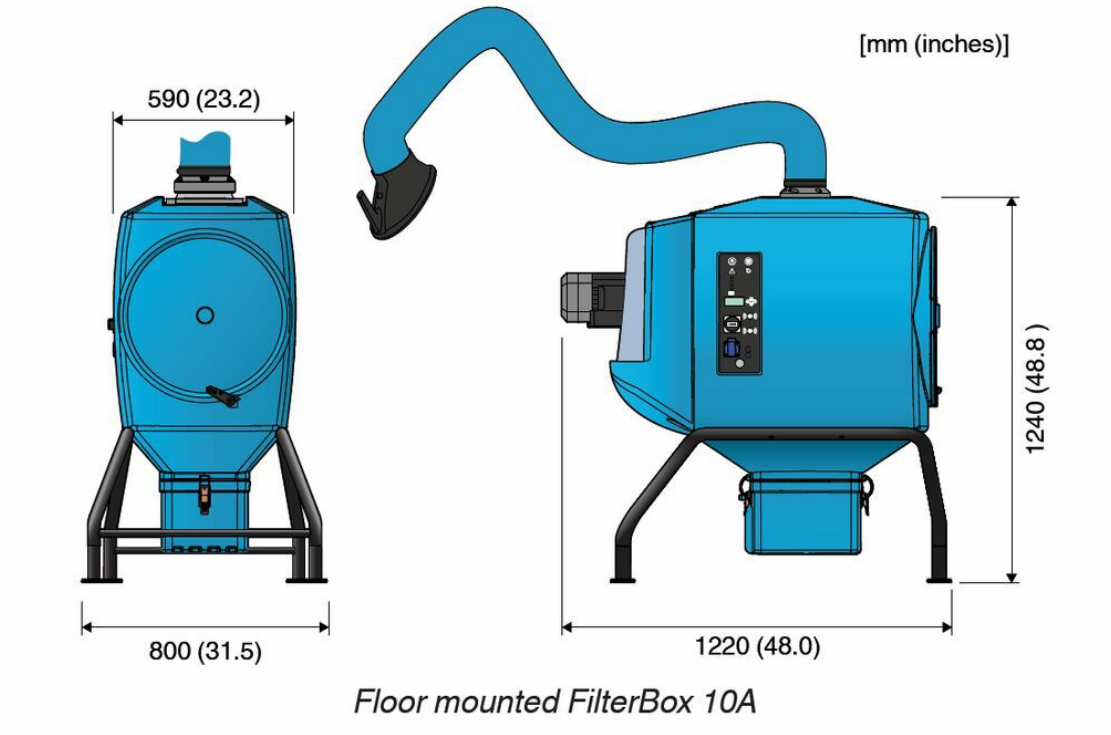

FilterBox 10A Floor

This content is protected under copyright law, furnished for informational use only, and subject to change without notice. © Nederman Holding AB