Product leaflet

Exhaust Hose Reel 865 - Spring Recoiled

Spring Recoiled Exhaust Hose Reel



This content is protected under copyright law, furnished for informational use only, and subject to change without notice. © Nederman Holding AB

Exhaust Hose Reel 865 - Spring Recoiled

- Easy, balanced operation
- Quick & easy installation reduces cost
- Automatic fan for energy savings
- Easy adjustment of lifting capacity
- Compact, modern design

For all types of vehicle workshops, etc. where the hose can hang at a reachable height. The patented spring drive makes the reel very easy to handle. The reel is available with or without automatic damper, the one with a patented integrated automatic damper saves energy and reduces the noise level. Optional retraction control is available for increased safety and efficiency. Two separate suspension brackets make mounting the reel a simple and safe procedure. The brackets are fixed to the wall or ceiling before the light-weight reel is lifted directly on to the brackets.
It is possible to mount the fan directly on the reel.

This content is protected under copyright law, furnished for informational use only, and subject to change without notice. © Nederman Holding AB

Exhaust Hose Reel 865 - Spring Recoiled

Certifications	CE

This content is protected under copyright law, furnished for informational use only, and subject to change without notice. © Nederman Holding AB

Models

	Item no	Type of hose	Delivered with hose	Colour	Body type	Diameter, hose (mm)	Hose length (m)	Weight (kg)	Max hose length
	20801765[1]	NTP	Yes	Blue	[wide]	125	7,5	41-49	10
	20800865[1]	NTP	Yes	Blue	[short]	75	5	31-38	7,5
	20800965	[W]	No	Blue	[short]	75		23	7,5
	20810265[1]	NTP	Yes	Blue	[short]	100	5	31-38	7,5
	20810365[1]	NTP	Yes	Blue	[wide]	100	7,5	41-49	10
	20811265[1]	NTP	Yes	Blue	[wide]	100	10	41-49	10
	20800765	[W]	No	Blue	[short]	100		23	7,5
	20800365	[W]	No	Blue	[wide]	100		31	10
	20800465[1]	NTP	Yes	Blue	[short]	125	5	31-38	5
	20800165	[W]	No	Blue	[wide]	125		31	10
	20804265	[W]	No	Blue	[wide]	150		31	10
	20804165	[W]	No	Blue	[short]	150		23	5
	20811565	NTP	Yes	White		100	7,5	41-49	

This content is protected under copyright law, furnished for informational use only, and subject to change without notice. © Nederman Holding AB

Models

	Item no	Type of hose	Delivered with hose	Colour	Body type	Diameter, hose (mm)	Hose length (m)	Weight (kg)	Max hose length
	20809065[1]	[W]	No	Blue	[wide]	200		31	7
	20809365	[W]	No	Grey	[short]	100		23	7,5
	20811765	NFC-3	Yes	Grey	[wide]	150	7,5		
	20820165	NR-CP	Yes	Blue	[short]	100	5	31-38	7,5
	20820365[2]	NR-CP	Yes	Blue	[short]	100	7,5	31-38	7,5
	20820565	NR-CP	Yes	Blue	[short]	125	5	31-38	5
	20820665	NR-CP	Yes	Blue	[wide]	125	7,5	41-49	10
	20820865	NR-CP	Yes	Blue	[wide]	125	10	41-49	10
	20820465	NR-CP	Yes	Blue	[wide]	100	10	41-49	10
	20821165[2]	NR-CP	Yes	Blue	[wide]	150	10	41-49	10
	20821365	NR-CP	Yes	Grey	[short]	100	7,5	41-49	
	20821565	NR-CP	Yes	Blue	[short]	75	5	31-38	7,5
	20821065	NR-CP	Yes	Blue	[wide]	150	7,5	41-49	10

This content is protected under copyright law, furnished for informational use only, and subject to change without notice. © Nederman Holding AB

Models

	Item no	Type of hose	Delivered with hose	Colour	Body type	Diameter, hose (mm)	Hose length (m)	Weight (kg)	Max hose length
	20821465	NR-CP	Yes	Grey	[wide]	150	10	31-38	

[1] Without damper
[2] Reinforced spring

Hose types

Hose type	Specification	Temperature range, °C	Hose fittings in free hose end, distribution hose	Hose fitting on free hose end, inlet hose	Hose connection on reel, distribution hose	Hose connection on reel, inlet hose
NFC3	High temperature kevlar based material. Helix in galvanised steel.	-60 to +300 Deg. C (Inttermittent +350 Deg. C)				
NRCP	Polyester fabric, EPDM/PP coated. Helix in Polyester with EPDM cover. Max bending radius 225mm (inside)	-40 to +150 Deg. C (Inttermittent +170 Deg. C)				
NTP	Theromplastic polyester fabric coated with EPDM/PP. Bending radius 244mm.	max. 150				

This content is protected under copyright law, furnished for informational use only, and subject to change without notice. © Nederman Holding AB

Accessories

	Accessory	Item no
	865 Controlled retraction kit	20373880
	Extraction trolley Reel on rail	20948610
	On-off switch	20373557
	Stand for fan	20373556
	Transformer 220/24v. 75va.	10361560
	Transformer 25va. 220-240v. 25va.	10363189
	Hand Control	20377441
	Remote Control	20377442

This content is protected under copyright law, furnished for informational use only, and subject to change without notice. © Nederman Holding AB

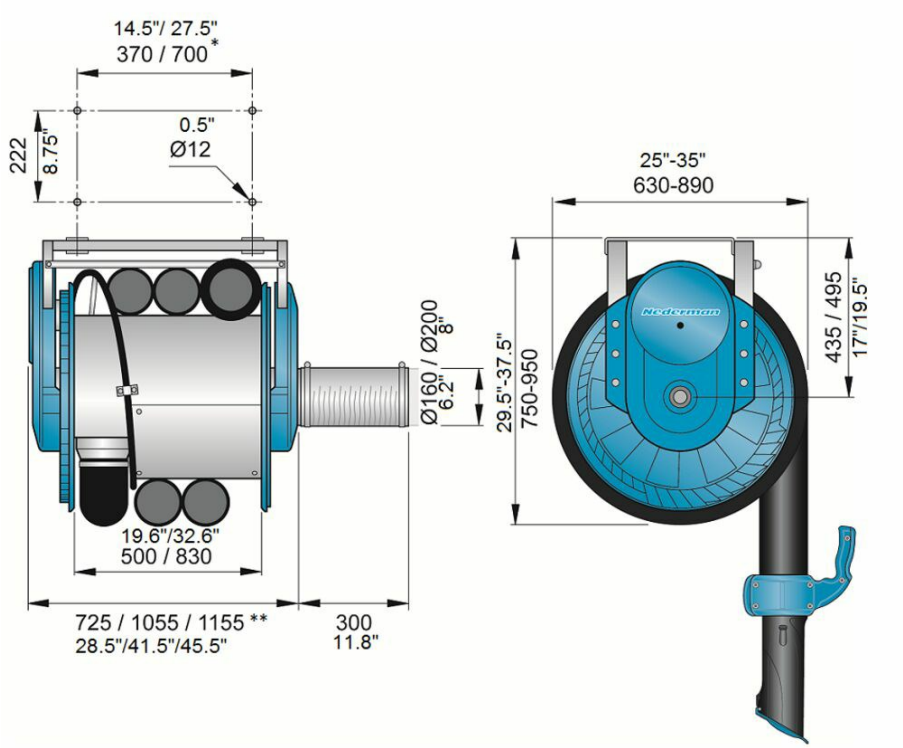

*) short drum / wide drum **) short drum / wide drum 100 - 150mm/ wide drum 200mm

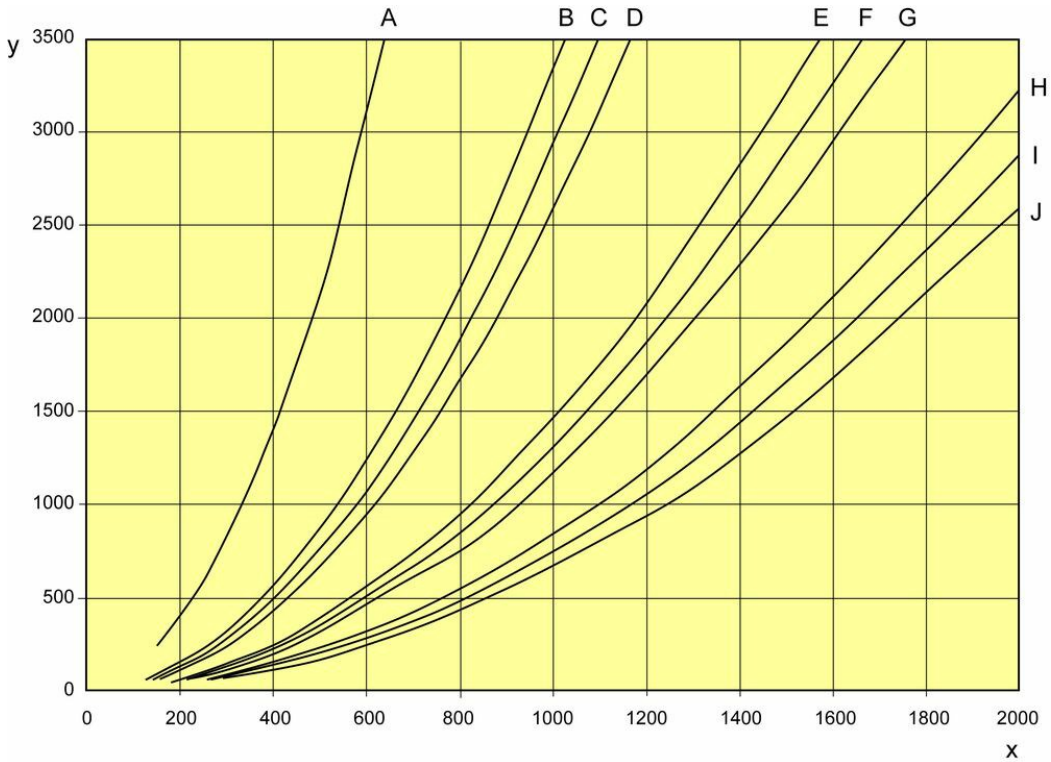

A. 75 mm (3"), 5 m (16'), B. 100 mm (4"), 10 m (33'), C. 100 mm (4"), 7.5 m (25'), D. 100 mm (4"), 5 m (16'), E. 125 mm (5"), 10 m (33'), F. 125 mm (5"), 7.5 m (25'), G. 125 mm (5"), 5 m (16'), H. 150 mm (6"), 10 m (33'), I. 150 mm (6"), 7.5 m (25'), J. 150 mm (6"), 5 m (16') For exhaust extraction systems in vehicle repair shops where engines are running without load and with low rpm's, the following air flows can be used as guidelines: Cars = 400 m³/h (110 l/s; 250 cfm) Trucks =1000 m3/h (280 l/s; 600 cfm) (pressure drop over reel when most of the hose is uncoiled) X = m3/h Y = Pa

This content is protected under copyright law, furnished for informational use only, and subject to change without notice. © Nederman Holding AB

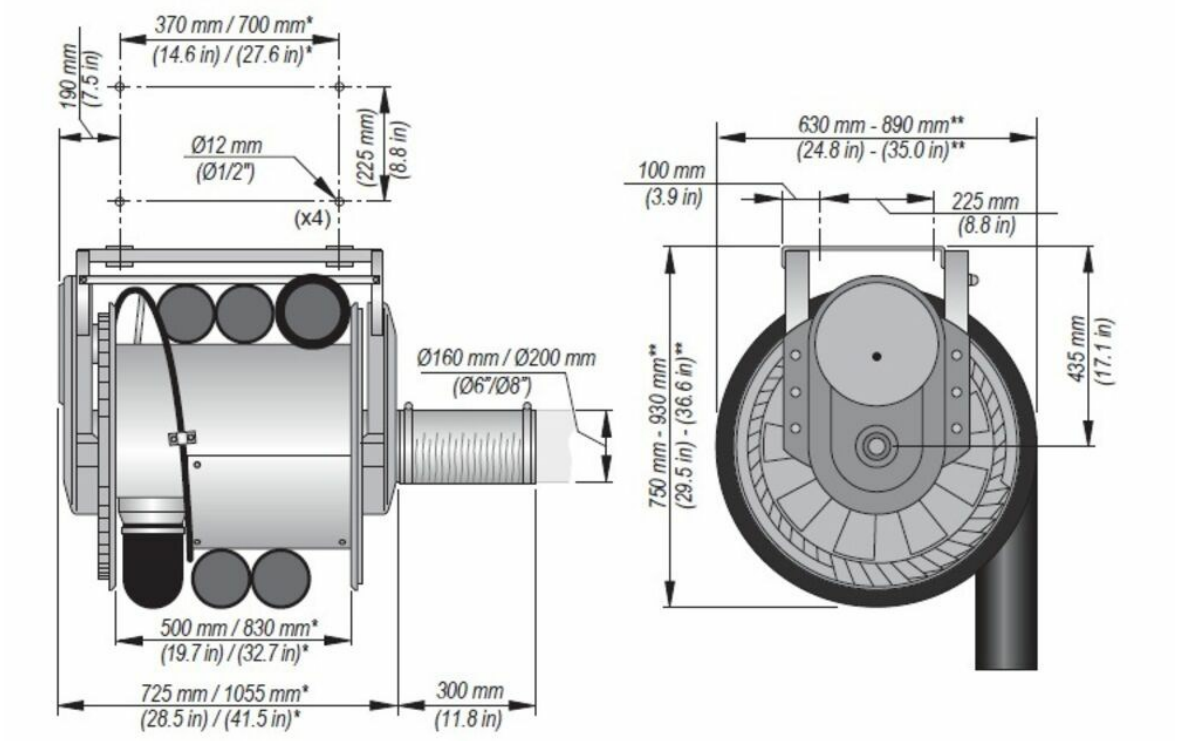

This content is protected under copyright law, furnished for informational use only, and subject to change without notice. © Nederman Holding AB