Product leaflet

Fan N16, Single phase

Compact centrifugal fan with a capacity of up to 1250 m³/hour (735 CFM).



This content is protected under copyright law, furnished for informational use only, and subject to change without notice. © Nederman Holding AB

Fan N16, Single phase

- Easy-to-use fan with plug and play
- Compact
- Meets the Ecodesign Regulation for industrial fans (Ecodesign Regulation 2024/1834)

The Nederman N16 fan is a compact centrifugal fan that is specially designed for use with Nederman extraction products. The Nederman N16 fan meets the Ecodesign Regulation for industrial fans (Ecodesign Regulation 2024/1834).

The fan is easy to use, 1-phase plug and play, and has a CE certification. With a capacity of up to 1250 m³/hour (735 CFM), the N16 fan is suitable for extracting dust and fumes in both indoor and outdoor environments.

Perfect to use together with Nederman extraction arms like: Original arm, Telescopic arm, Standard arm etc, and can be controlled with a fan starter.

Note! The fan must not be used in an environment with danger of explosion or for transport of inflammable or explosive gases.

This content is protected under copyright law, furnished for informational use only, and subject to change without notice. © Nederman Holding AB

Fan N16, Single phase

Certifications	CE
Noise level (dB(A))	62 dB at 1000 m3/h
Protection class	IP55
Installation	Indoor, Outdoor
Material	Material: Fan casings: galvanised sheet steel Impeller: die cast aluminium
Application	Dust, Fumes
Airflow (m³/h)	1250
Capacity (max airflow m3/h)	1250
Ambient temperature range	-20 to +40 C (-4 F to 104 F)
Power voltage (V)	230
Frequency (Hz)	50
No of phases	1
Amperage (A)	3,3
Weight (kg)	14,5
Power (kW)	0,55

This content is protected under copyright law, furnished for informational use only, and subject to change without notice. © Nederman Holding AB

Models

	Item no
	14510121

This content is protected under copyright law, furnished for informational use only, and subject to change without notice. © Nederman Holding AB

Accessories

	Accessory	Item no
	Fan Control Man 1~ 1-5A	14518837
	Fan Control Autom 1~ 1-5A	14519237
	Reducer. diam.125/100mm.	14341077
	Reducer. diam.125/75mm. black.	14341080
	Adaptor Ø160/ext. Ø75 mm	14510426
	Adaptor Ø160/ext. Ø100 mm	14510526
	Reducer inside diam=160mm. outside	14510626
	Adapter. diam 160/150mm.	14511226
	Adapter diam.=160mm.	14510326
	In- and outlet connection with	14322166
	Guard net for fan N16 and N24.	14333181
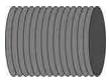	Pvc-hose. diam.100mm.L=5m	10500427
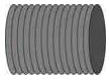	Pvc-hose. diam.5". l=5m.	10500527

This content is protected under copyright law, furnished for informational use only, and subject to change without notice. © Nederman Holding AB

Accessories

	Accessory	Item no
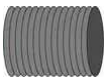	Pvc-hose. diam.6". l=5m.	10500627
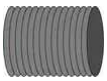	Pvc-hose diam. 160mm.L=5m	10511026
	Connector 3"-3". (75mm).	14503626
	Connector 4"-4". (100mm).	14504626
	Connector 5"-5". (125mm).	14505626
	Connector 6"-6". (150mm).	14506626
	Adapter diam=160mm	14511326
	Nozzle. silumin. with magnet.	14500226
	Nozzle. plastic. with magnet.	14501226
	Exhaust silencer for fan.	14502126
	Silencer for fan	14502626
	Silencer.Including quick release	14502226
	Wall bracket for silencer. pair.	14343089

This content is protected under copyright law, furnished for informational use only, and subject to change without notice. © Nederman Holding AB

Accessories

	Accessory	Item no
	Double adapter. diam.125mm/2x125mm.	14500726
	Split intake(t-tube).	14510726
	Double adapter. diam.125mm/2x75mm.	14500826
	Support bracket for N10/N16/N24 for fixed mounting. Incl guard net and inlet connection.	14510126
	Bracket for serial N16 and N24 portable	14511426

This content is protected under copyright law, furnished for informational use only, and subject to change without notice. © Nederman Holding AB

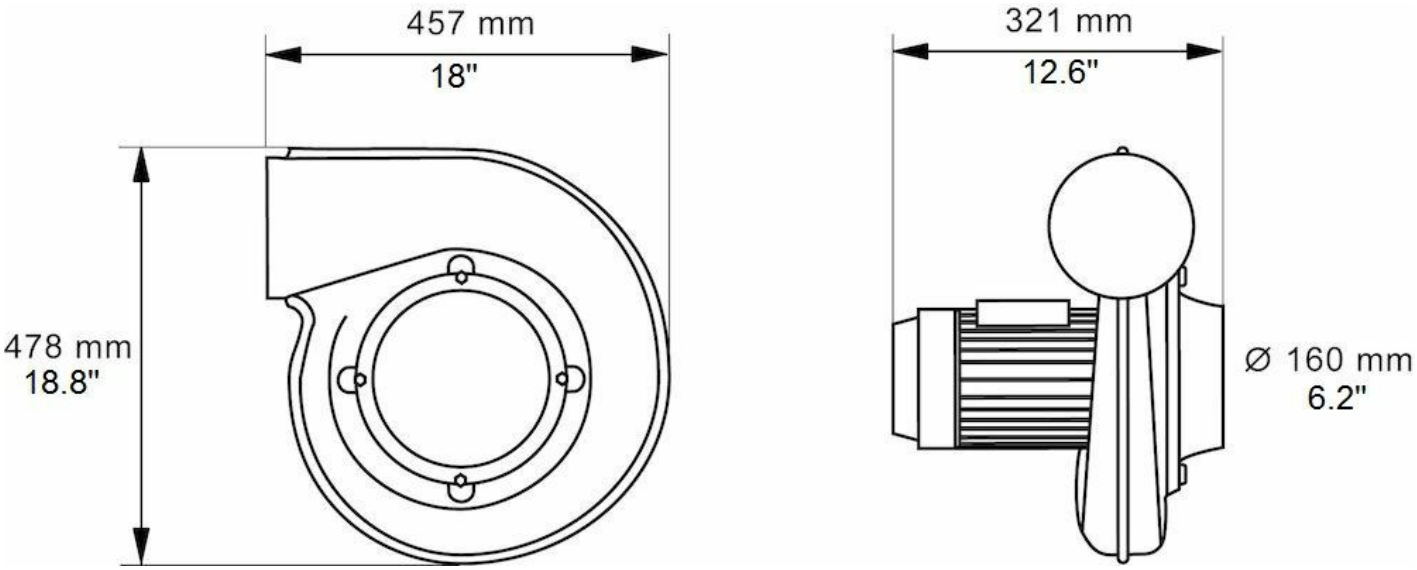

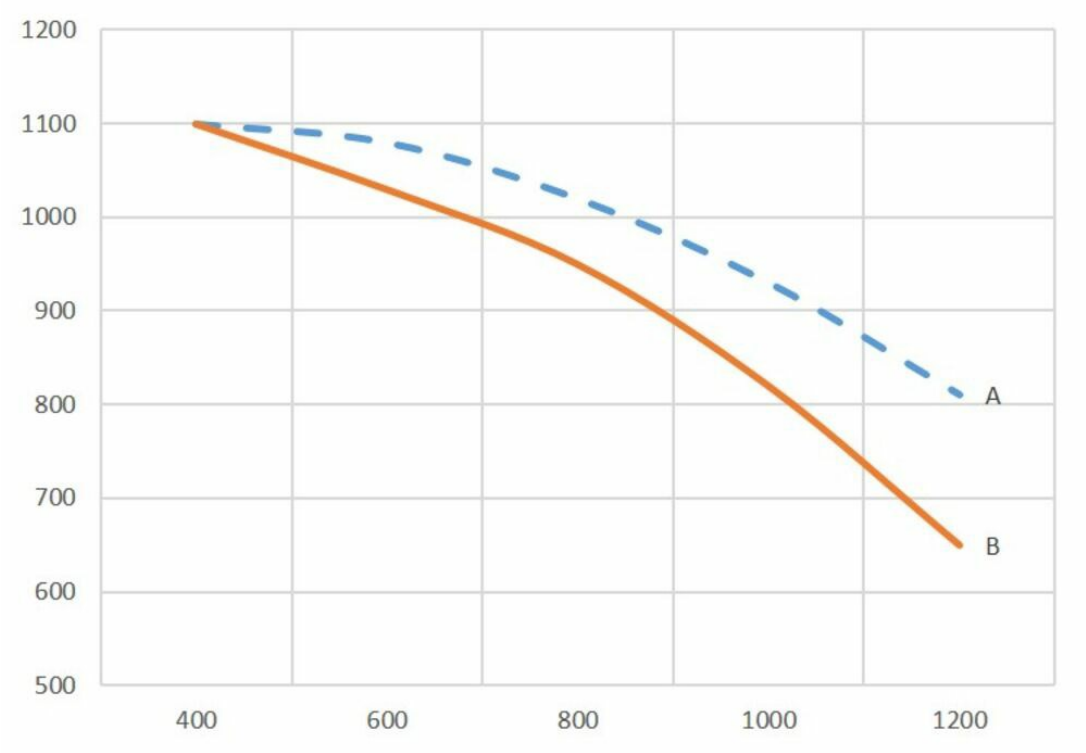

A: Fan total Pressure B: Fan Static Pressure X: m3/h Y: Pa

This content is protected under copyright law, furnished for informational use only, and subject to change without notice. © Nederman Holding AB