Product leaflet

MCP SmartFilter

Cartridge filter for both indoor and outdoor installations. The filter can be used for many different dust producing industries.



This content is protected under copyright law, furnished for informational use only, and subject to change without notice. © Nederman Holding AB

MCP SmartFilter

- Gain control over filtration performance with Insight Analytics. Nederman's unique monitoring technology
- Optimized footprint through innovative cartridge design with high airflow
- Reduced TCO through intelligent cleaning system, long filter cartridge life-time and optimized footprint
- Future Proof system that is IoT prepared– Insight Ready
- Controller, HMI and Gateway all in one unit with the Insight Control Panel.

MCP SmartFilter is a multi-purpose filtration system. It is customizable to perfectly fit customer specific demands with airflow up to 28 000 m3/h. Suitable for smoke, fumes and dust and can be used in several different applications such as welding, metal cutting and general dust.
The modular design allows for standalone solutions as well as multi-filter solutions for extended requirements. With a new and innovative cartridge design - the squircle shape utilizes the square space within the dust collector in the most optimal way and generates high cartridge airflow. Thus, decreasing the size and hence the footprint of the system.
Constructed with 2 mm galvanized steel panels, it is easy to install, cost effective to ship and provides corrosion protection. The design is optimized for long filter lifetime providing low cost of ownership.
Insight ready control with advanced pulse cleaning logic provides for full system operation including control and monitoring, as well as gateway functionality for cloud communication.
The MCP SmartFilter has a large accessories program including; fans, inlets, bins etc. and the cartridges are available in a wide variety of materials.

This content is protected under copyright law, furnished for informational use only, and subject to change without notice. © Nederman Holding AB

MCP SmartFilter

Certifications	CE
Compressed air consumption	60 litres per cleaning pulse at 6,0 bar compressed air
Installation	Indoor, Outdoor
Material	2 mm galvanised sheet metal
Suitable for combustible dust	False
Filter cleaning method	Pulse jet
Application	Fumes, Dust
Working pressure (kPa)	Vacuum max. 6 kPa. Overpressure max. 0 Pa. (1,5 kPa for silotop solution)
Dustbin volume (l)	50 or 100 litre bin
Filter Area (m²)	Polyester: 30 to 192 m2 SC178: 67 to 422 m2 SC179: 32 to 208 m2
Capacity (max airflow m3/h)	4500 to 28000
[ProductOperatingTemperature]	-20 to +60 Deg. C.

This content is protected under copyright law, furnished for informational use only, and subject to change without notice. © Nederman Holding AB

Models

	Item no	Filter type	Number of filter elements
	MCP-2-8S[1]	Cartridge	8
	MCP-4-16S[1]	Cartridge	16
	MCP-6-24S[1]	Cartridge	24
	MCP-8-32S[1]	Cartridge	32
	MCP-2-8SL[1]	Cartridge	8
	MCP-4-16SL[1]	Cartridge	16
	MCP-6-24SL[1]	Cartridge	24
	MCP-8-32SL[1]	Cartridge	32

[1] Configured product

This content is protected under copyright law, furnished for informational use only, and subject to change without notice. © Nederman Holding AB

Accessories

	Accessory	Item no
	Cartridge CA190-40F L= 850	5502126
	Filter Cartridge SC178-132F	5512713
	Filter Cartridge SC100-38F	5512700
	Filter Cartridge SC140-38F	5512701
	Filter Cartridge SC190-38F	5512707
	Filter Cartridge SC178-84F	5512705
	Filter Cartridge SC100-60F	5512708
	Filter Cartridge SC140-60F	5512709
	Filter Cartridge SC190-60F	5512715
	Cartridge Module W/SC100-38F	5512720
	Cartridge Module W/SC140-38F	5512721
	Cartridge Module W/SC178-84F	5512724
	Cartridge Module W/SC190-38F	5512726

This content is protected under copyright law, furnished for informational use only, and subject to change without notice. © Nederman Holding AB

Accessories

	Accessory	Item no
	Cartridge Module W/SC100-60F	5512727
	Cartridge Module W/SC178-132F	5512731
	Cartridge Module W/SC190-60F	5512733
	Filter Cartridge SC108-65F	7946760
	Filter Cartridge SC108-41F	7946761
	Cartridge Module W/SC108-65F	7946762
	Cartridge Module W/SC108-41F	7946763

This content is protected under copyright law, furnished for informational use only, and subject to change without notice. © Nederman Holding AB

Cartridge material

- SC100 – Spunbond polyester
- SC108 – Spunbond Polyester with nanofiber
- SC140 – Spunbond polyester with antistatic treatment
- SC148 – Spunbond polyester with antistatic treatment and nanofiber
- SC151 – Spunbond polyester with antistatic treatment and ePTFE membrane
- SC160 – Spunbond Polyester + ePTFE membrane
- SC178 – 80% cellulose, 20% polyester material with nanofiber
- SC190 – Spunbound polyester with PTFE coating

A – Height of Clean Air Chamber (mm)			
200	350	500	650
Shown in drawings	Add 150 mm in height	Add 300 mm in height	Add 450 mm in height

This content is protected under copyright law, furnished for informational use only, and subject to change without notice. © Nederman Holding AB

MCP-2-8S / MCP-2-8S-Ex
MCP-2-8SL / MCP-2-8SL-Ex

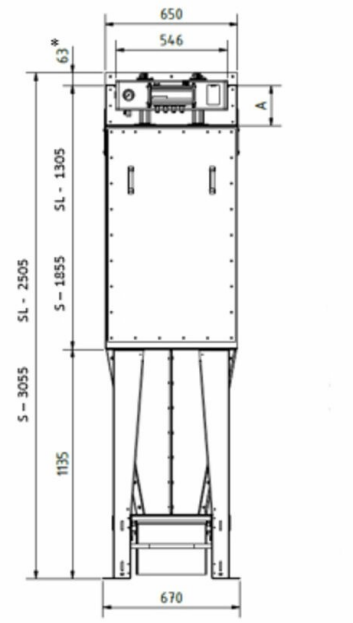

All dimensions in mm. If 50 liter bin with wheels 90 mm must be added to the height. * to be included only if a top mounted FM fan is used (transition for fan).

MCP-8-32S / MCP-8-32S-Ex
MCP-8-32SL / MCP-8-32SL-Ex

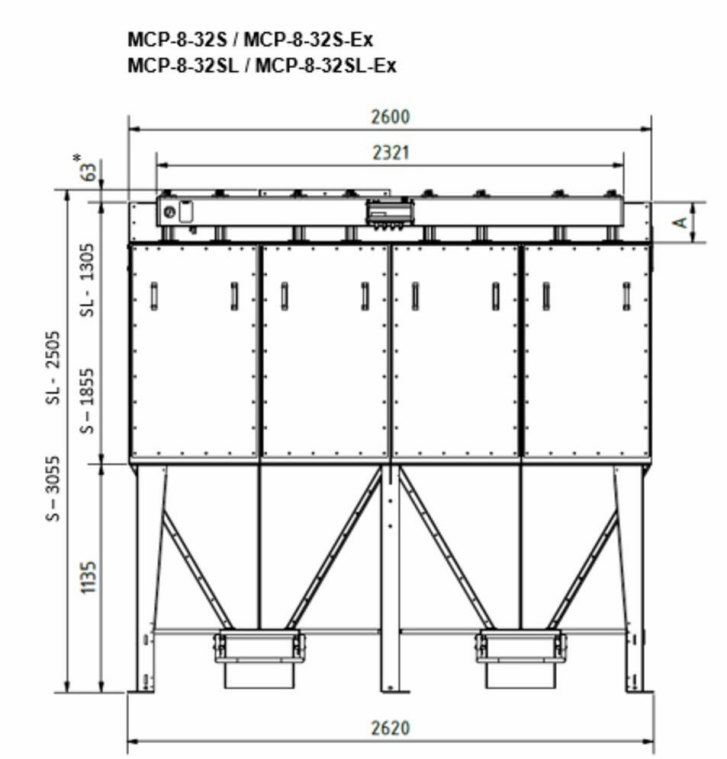

All dimensions in mm. If 50 liter bin with wheels 90 mm must be added to the height. * to be included only if a top mounted FM fan is used (transition for fan).

This content is protected under copyright law, furnished for informational use only, and subject to change without notice. © Nederman Holding AB

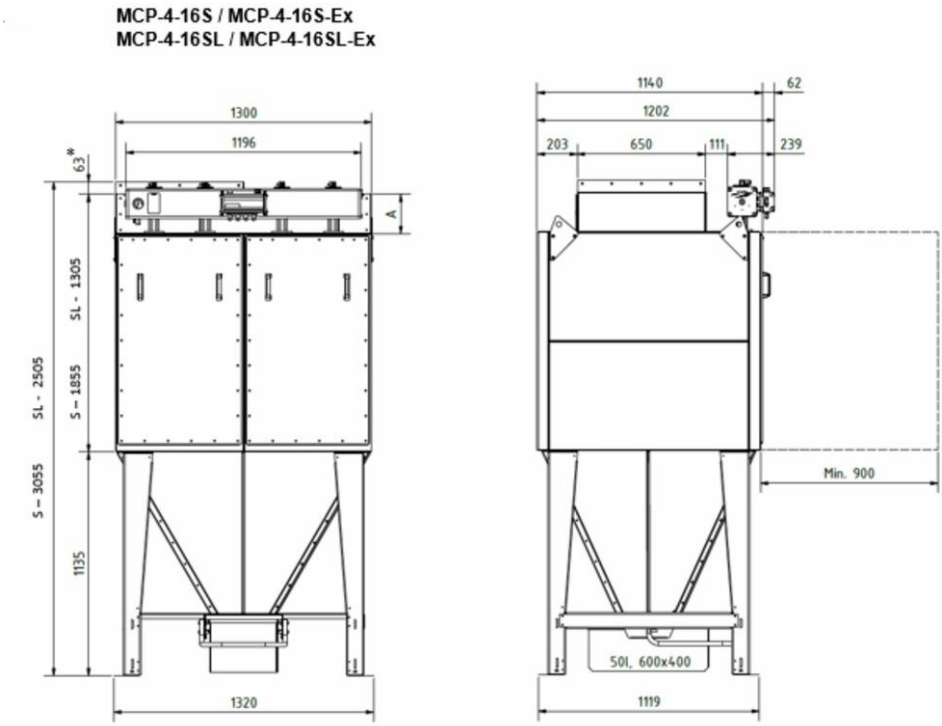

All dimensions in mm. If 50 liter bin with wheels 90 mm must be added to the height. * to be included only if a top mounted FM fan is used (transition for fan).

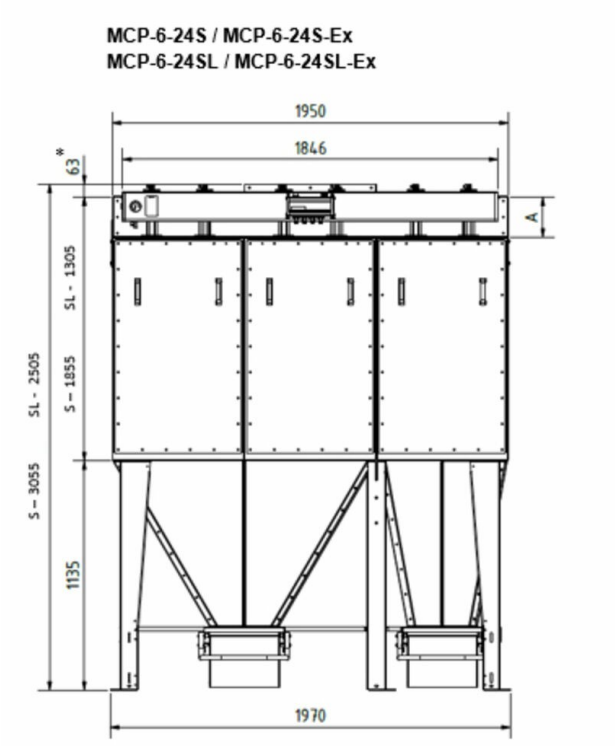

All dimensions in mm. If 50 liter bin with wheels 90 mm must be added to the height. * to be included only if a top mounted FM fan is used (transition for fan).

This content is protected under copyright law, furnished for informational use only, and subject to change without notice. © Nederman Holding AB

Filter area

Filter type	Quantity of cartridges	Filter area (m²) SC100, SC140, SC141, SC150, SC151, SC190	SC178	SC179	Max. airflow (m³/h)*
MCP-2-8S MCP-2-8S-Ex	8	48,0	105,6	52,0	7000
MCP-4-16S MCP-4-16S-Ex	16	96,0	211,2	104,0	14000
MCP-6-24S MCP-6-24S-Ex	24	144,0	316,8	156,0	21000
MCP-8-32S MCP-8-32S-Ex	32	192,0	422,4	208,0	28000
MCP-2-8SL MCP-2-8SL-Ex	8	30,4	67,2	32,8	4500
MCP-4-16SL MCP-4-16SL-Ex	16	60,8	134,4	65,6	9000
MCP-6-24SL MCP-6-24SL-Ex	24	91,2	201,6	98,4	13500
MCP-8-32SL MCP-8-32SL-Ex	32	121,6	268,8	131,2	18000

*Max. air flow is dependent on the dust type, etc.

Accessories

Figure	Description	Figure	Description
	Top mounted FM-fans 50 Hz or 60 Hz up to 14000 m³/h	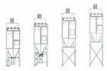	Leg height extensions from 0 mm to 2000 mm to fit larger bins/containers, rotary valves and big bags
	Combifab remote fans 50 Hz or 60 Hz		Leg width extension 300 mm to left, right or both sides to fit larger bins/containers, rotary valves and big bags
	Noise enclosure to reduce fan and motor break-out-noise of FM-fans		Suspension below rotary valve for big bag
	Dual silencer to reduce air flow, fan noise and motor break-out-noise of FM-fans (available with grid (indoor use), grid and rain cover (outdoor use) or flange for duct connection)		Isolation box for pressure tank incl. cleaning valves
	Regulation (iris) damper at fan inlet for FM-fans		Access platform with ladder for maintenance
	Dust bins (50 l, 50 l with wheels and 100 l with wheels)		Lime feeder NFKG-70
	Plastic bag in the dust bin with pressure compensation set 'bin balancing'		Several sensors available for extraction, filtration and discharge process
	Rotary valves NRS3 and NRSZ3		Water separator and pressure regulator
	Dust discharge valve NFUS3		QF-duct system

This content is protected under copyright law, furnished for informational use only, and subject to change without notice. © Nederman Holding AB