Nederman

Original operating manual
EN USER MANUAL

Operating manual

Cartridge/cassette filter

MCP/MEP
MCP/MEP Ex

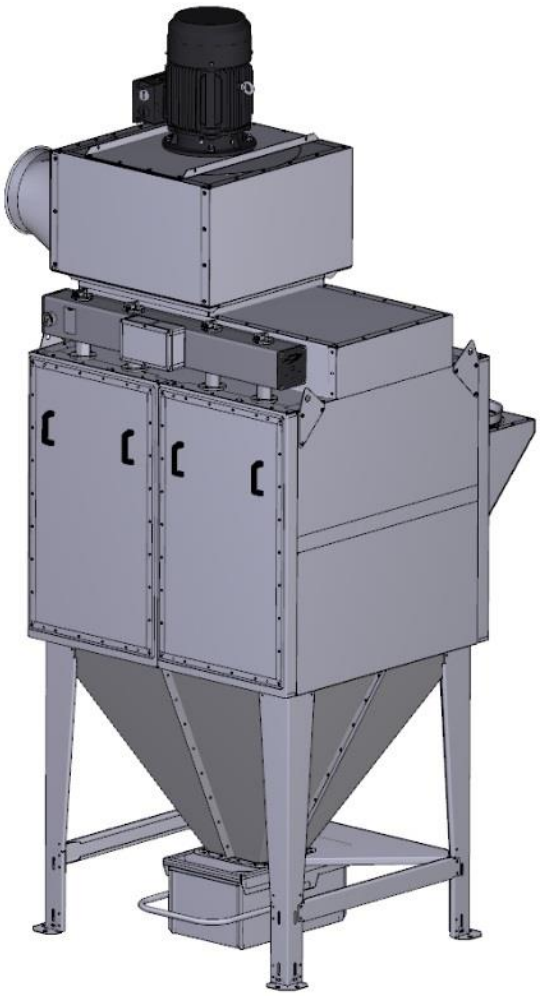

EN

2023-05-18

Imprint

Publisher/Manufacturer

NEDERMAN Manufacturing Poland Sp. z o. o.
Ul. Okólna 45 A
05-270 Marki, Poland
☏ : +48 22 7616000
🖷 : +48 22 7616099
🌐 : www.nederman.com.pl

Spare part service

@ : CSG.Marki@Nederman.pl

Copyright

The copyright for this manual remains with the company NEDERMAN Manufacturing Poland Sp. z o. o.

This manual is to be treated in confidence. It is to be used exclusively within your company by persons authorized to do so. Allowing third parties to access this manual is forbidden. All documents are protected as defined by copyright protection law.

Forwarding and reproduction of documents, including parts thereof, as well as the utilization and disclosure of their contents is prohibited unless our express permission has been obtained. Contraventions of copyright law are punishable and subject to obligatory payment of damages.

All rights are reserved in respect of exercising industrial property rights.

This manual has been prepared with the utmost care and attention. We do not accept liability for any faults contained therein. Liability will be excluded wherever legally permissible for direct and indirect damage in connection with the supply and application of this manual.

Table of contents

1 Concerning this manual 6
1.1 Purpose 6
1.2 Validity 6
1.3 Defining target groups 6
1.4 Symbols 7
2 Field of application and technical data 8
2.1 Field of application 8
2.2 Rating plates 9
2.3 Technical data 10
2.3.1 Filter MCP 10
2.3.2 Filter MEP 10
2.3.3 Permanent filters parameters for MCP & MEP 11
2.3.4 Built-in fan FM 11
2.4 Electric connection conditions 12
2.5 Operating pressure and compressed air quality 12
3 Fundamental safety instructions 13
3.1 Product safety 13
3.2 Tasks of the operator 14
3.2.1 Staff selection and qualifications 14
3.3 Safety measures by personnel 15
3.3.1 Safety-conscious work behaviour 15
3.3.2 Operator's tasks 15
3.4 Risks 15
3.5 Technical components of the safety system 16
3.5.1 Protective facilities 16
3.5.2 Danger, warning and information ("Note") signs 16
3.6 Fire protection 16
3.6.1 Action in the event of fire 17
4 Explosion protection 18
4.1 ATEX designation 19
4.1.1. Area classification in the filter 20
4.2 Establishment and marking of the safety zone 20
4.3 Establishment and marking of the safety zone – flameless pressure relief devices 21
4.4 Conduct in the safety zone 21
4.5 Equipment 21
4.6 Measures following an explosion 22
4.7 Use of tools in areas with potentially explosive atmosphere 22
5 Structure and function 23
5.1 Structure – silo filter 23
5.2 Structure – standard filter 23
5.3 Structure – rotary valve filter 24
5.4 Structure – filter with rotary valve and BIG-BAG 24
5.5 Function 25
5.6 Cleaning the filter cartridges 26
5.6.1 Description of the components 26
5.6.2 Built-in fan 28
5.6.3 Single flap valve – manually operated – NFUS3 29
6 Operation Site 30
6.1 Location and foundation requirements 30
6.2 Permissible ambient conditions 30
7 Transport and delivery 31
7.1 Transport 31
7.1.1 Component supply 31
7.1.2 Transport by pallet truck or fork-lift truck 31
7.1.3 Transport by crane 32
7.2 Packaging 32
7.3 Checking supplied components 32
8 Storage and Conservation 33

8.1 Storage of components ... 33
8.2 Conservation of the machine/plant ... 34
8.2.1 Maintenance and inspection of the conserved machine / plant ... 34
8.2.2 Measures prior to commissioning after shutdown ... 34
9 Assembly ... 35
9.1 Tightening the screws ... 35
9.2 Earthing of the components ... 35
9.3 Tools ... 36
9.4 Assembly filter ... 36
9.4.1 Silo filter ... 36
9.4.2 Filter ... 37
9.4.3 Dust container ... 41
9.4.4 Built-in fan ... 42
9.4.5 Built-in fan with Dual silencer ... 43
9.4.6 Clean gas connection piece ... 45
9.4.7 Dirty gas connection piece ... 46
9.4.8 Acoustic hood ... 47
9.4.9 Acoustic hood ... 47
9.5 Supply connection points ... 48
9.5.1 Compressed air connection ... 48
9.5.2 Differential pressure measurement hose connectors ... 48
9.5.3 Connection cable: control cabinet – valve box ... 49
9.5.4 Connection cable: valve box – valve box ... 49
9.5.5 Open cover of the sound insulation hood ... 49
9.5.6 Power supply connection ... 51
9.5.7 Burst sensor ... 52
9.6 Earthing of the machine/plant ... 52
10 Initial commissioning ... 53
10.1 Preparatory activities ... 53
10.2 Commissioning ... 53
11 Operation ... 54
11.1 Plant start-up ... 54
11.2 Plant shutdown ... 55
12 Troubleshooting ... 56
12.1 Safety instructions ... 56
12.2 Troubleshooting with the power supply switched on ... 57
12.3 Checklists in event of faults ... 57
12.3.1 Filter ... 58
12.3.2 Explosion vent ... 59
12.3.3 Pressure release valve ... 59
12.3.4 Electric drives ... 60
13 Maintenance and repair ... 62
13.1 Maintenance ... 62
13.2 Repair ... 63
13.3 Safety instructions ... 63
13.4 Safety instructions – explosive atmosphere ... 66
13.5 Checklists for maintenance ... 69
13.5.1 Filter ... 69
13.5.2 Filter controller ... 70
13.5.3 Explosion vent ... 70
13.5.4 FM fan routine inspection ... 71
13.6 Filter ... 71
13.6.1 Replace filter cartridge ... 71
13.6.2 Replace filter module ... 74
13.6.3 Replace diaphragm ... 76
13.6.4 Residual dust disposal ... 78
14 Spare parts stock ... 81
14.1 Spare parts lists ... 81
14.1.1 Inspection door – standard ... 82
14.1.2 Inspection door – de lux ... 82

14.1.3 Inspection door – reinforced on hinges ... 83
14.1.4 Cartridge filter module ... 84
14.1.5 Cassette filter module ... 85
14.1.6 Securing arm ... 85
14.1.7 Compressed air facility ... 86
14.1.8 Differential pressure measurement ... 87
14.1.9 Residual dust disposal ... 87
14.1.10 Accessories ... 88
14.1.11 Built-in fan ... 88
15 Decommissioning and Dismantling ... 89
15.1 Decommissioning ... 89
15.2 Dismantling ... 90
16 Disposal ... 91
17 Appendix ... 92
17.1 Warranty ... 92
17.2 Liability restrictions ... 93
18 Supplier documentation ... 94

1 Concerning this manual

1.1 Purpose

This manual is a part of the machine/plant and describes its safe and proper use during all operating phases.

➔ Read the manual carefully before using the machine/plant.
➔ Keep the manual in a safe place for the duration of the machine/plant's service life.
➔ Make sure that the manual is accessible to personnel at all times.
➔ Pass the manual on to each subsequent owner or user of the machine/plant.

1.2 Validity

This manual is exclusively valid for the machine / plant specified on the title page and in the technical data.

1.3 Defining target groups

Target group	Defining	Task
Owner	The owner (business person/company) is defined as being the party operating the machine/plant and using it in conformity with its intended purpose or ordering suitable and instructed persons to operate it on their behalf.	➔ This manual must be accessible to personnel at all times. ➔ The operator must ensure that personnel read and understand this manual and observe the instructions it contains. If necessary, the operator must carry out appropriate training courses.
Operators	Operators are defined as the persons instructed to operate the machine/plant by its owner.	➔ Read, observe and comply with the manual, especially the safety instructions and warnings.
Technical personnel	Technical personnel comprise anyone to whom special tasks, such as servicing and troubleshooting, have been entrusted by the owner and who has been trained by us.	
Electricians	An electrician is defined as being anyone who, on the basis of their professional qualifications, has experience of electrical plant, is familiar with the relevant standards in force and can not only assess and carry out the assigned tasks, but also recognize and avert potential hazards.	
Duly instructed persons	Persons instructed and trained in the tasks they have been assigned and the possible dangers and risks that could arise from incorrect behaviour. Persons who have been informed regarding the necessary safety devices, protective measures, corresponding regulations, accident prevention regulations and operating conditions.	

1.4 Symbols

Warning signs are used in this manual for your safety and to avoid injury. The warning signs are divided into the following danger levels:



DANGER

Non-compliance will result in death or serious injury!



WARNING

Non-compliance can lead to death or serious injury!



CAUTION

Non-compliance can lead to medium or minor injuries!

ATTENTION

Non-compliance can lead to property damage!



NOTICE

Information for better understanding or optimization of work processes.

2 Field of application and technical data

2.1 Field of application

MEP & filters MCP and the MCP & MEP Ex is intended for cleaning dust-laden air from continuous processes..

Filters MCP & MEP Ex are designed to filter potentially explosive dusts, comply with the ATEX directive.

The machine / plant is protected against the effects of an explosion that may occur inside, by pressure relief devices..

The machine / plant is not intended for use with explosive dust - applies to the standard version.

The machine / plant may only be installed in areas without potentially explosive atmospheres - applies to the ATEX version without the outer zone.

The machine / plant can be installed in a Zone 22. Explosive atmospheres may occur not or rarely in these areas- applies to the ATEX version for the outer zone.

Any other or additional use is deemed to be improper.

Conforming use also includes the following points:

- ➔ Observing and compliance with this manual.
- ➔ Observing and compliance of the assembly and/or operating manuals from the sup-suppliers.
- ➔ Compliance with the operating data (→ section **"Technical data"**).
- ➔ No modification of the machine/plant without the prior written consent of the manufacturer.

Liability for damage and losses resulting from non-conforming use of the plant rests exclusively with the owner/operator of the plant.

In addition, non-compliance with the plant's conforming use will result in the following consequences:

- Warranty will cease to be valid.
- The declarations will cease to be valid.

2.2 Rating plates

The rating plate contains the following information:

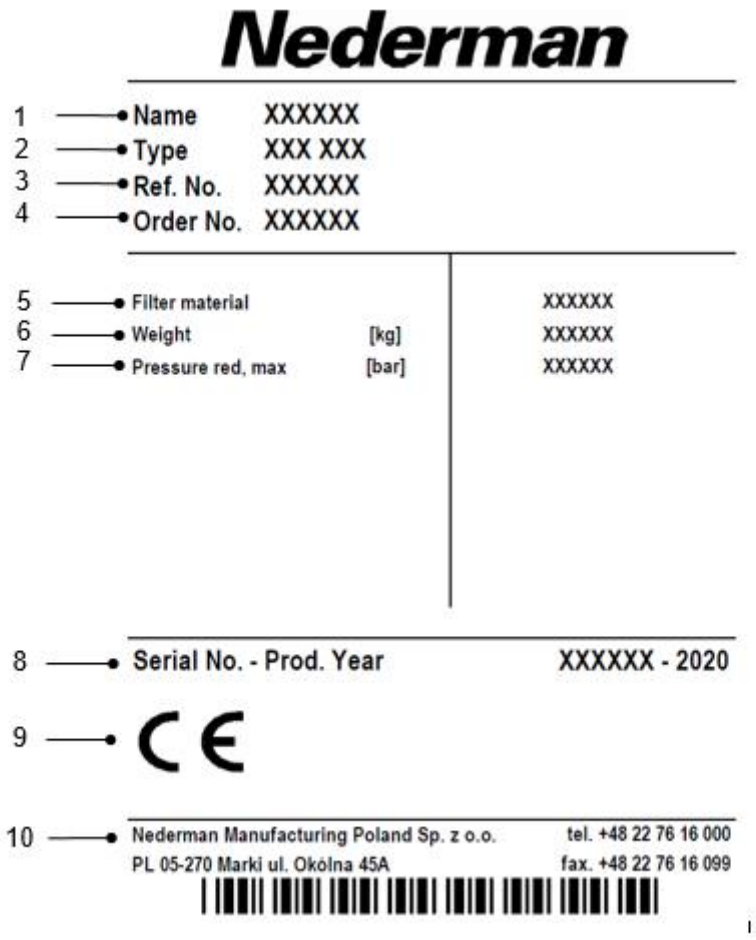

1 Name
2 Type
3 Ref. No.
4 Order No.
5 Filter material
6 Weight
7 Working pressure
8 Serial No. / Year of construction
9 CE marking
(only in the case of complete machines / plants or in the case of ATEX version)
10 Manufacturer

2.3 Technical data

2.3.1 Filter MCP

Type of filter	# valves # modules	Quantity filter cartridges	Filtering area (m^2)			Maximum volume flow (m^3/h)
			SC100, SC108, SC140, SC160, SC151, SC190	SC148	SC178	
MCP-2-8S MCP-2-8S-EX	2	8	48	52	105,6	7000
MCP-4-16S MCP-4-16S-Ex	4	16	96	104	211,2	14000
MCP-6-24S MCP-6-24S-Ex	6	24	144	156	316,8	21000
MCP-8-32S MCP-8-32S-Ex	8	32	192	208	422,4	28000
MCP-2-8SL MCP-2-8SL-Ex	2	8	30,4	32,8	67,2	4500
MCP-4-16SL MCP-4-16SL-Ex	4	16	60,8	65,5	134,4	9000
MCP-6-24SL MCP-6-24SL-Ex	6	24	91,2	98,4	201,6	13500
MCP-8-32SL MCP-8-32SL-Ex	8	32	121,6	131,2	268,8	18000

Maximum grain size [mm]		Maximum amount of material [kg/m^3]	
SC100, SC108, SC140, SC148, SC160, SC151, SC190	SC178	SC100, SC108, SC140, SC148, SC160, SC151, SC190	SC178
95% <0,1X0,1X0,1 5%<1x1x1	95% <0,1X0,1X0,1 5%<1x1x1	< 0,005	< 0,002

2.3.2 Filter MEP

Type of filter	# valves # modules # cassettes	Filtering area (m^2)	Maximum volume flow (m^3/h)	Maximum grain size [mm]	Maximum amount of material [kg/m^3]
MEP-2-4 MEP-2-4-Ex	2	15	1800	90% <2X2X2 10%<2x5x10	< 0,02
MEP-4-4 MEP-4-4-Ex	4	29	3400		
MEP-6-4 MEP-6-4-Ex	6	44	5200		
MEP-8-4 MEP-8-4-Ex	8	58	7000		
MEP-2-6 MEP-2-6-Ex	2	22	2600	95% <1X1X1 5%<2x2x5	< 0,01
MEP-4-6 MEP-4-6-Ex	4	44	5200		
MEP-6-6 MEP-6-6-Ex	6	66	8000		
MEP-8-6 MEP-8-6-Ex	8	88	10500		

2.3.3 Permanent filters parameters for MCP & MEP

NOTICE

Pressure loss during normal operation should not exceed 1,800 Pa.

Maximum overload pressure [Pa]	0
Maximum negative pressure - Standard [Pa]	6000
Maximum negative pressure – ATEX [Pa]	5000

Operating temperature limitations	
Maximum operating temperature [°C]	+60
Minimal operating temperature [°C]	+5
Maximum ambient temperature [°C]	+40
Minimal ambient temperature [°C]	-20

2.3.4 Built-in fan FM

Type	Motor power [kW]	Optimum duty point [m³/h]	Maximum recommended airflow [m³/h]	Minimum required airflow [m³/h]	Maximum rotation speed [min-1] at 50 Hz	Maximum rotation speed [min-1] at 60 Hz	Noise level [dB(A)1m][2]	Weight [kg]
FM620	3.0	2000	3000	250	3000	3600	65	74
FM622	4.0	3000	4000	350	3000	3600	69	83
FM625	5.5	4000	5000	500	3000	3600	67	95
FM825	7.5	5000	6000	600	3000	3600	72	150
FM831	11.0	7000	8000	900	3000	3600	73	166
FM835	15.0	9000	10000	1200	3000	3600	74	180
FM1000	18.5	14000	16000	1500	3000	3600	76	260

[1] Applies to ateks version fans

[2] Measuring surface sound pressure level in 1 m distance for connected blowout duct [dB(A)]. Applies to all fans with a frequency of 50 Hz, without acoustic hood.

Characteristic:

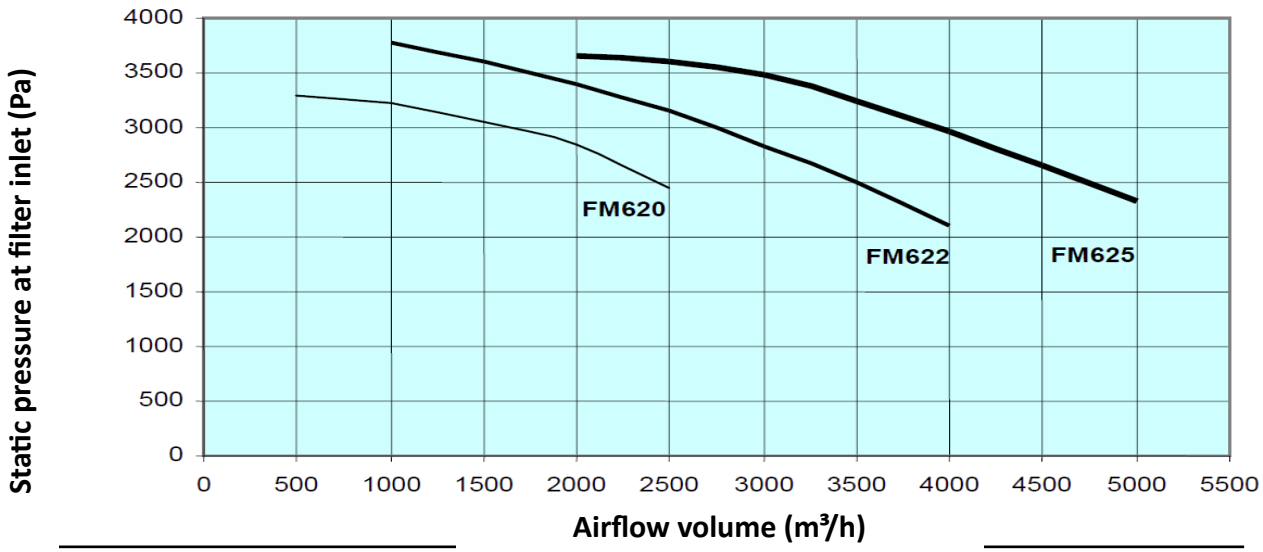

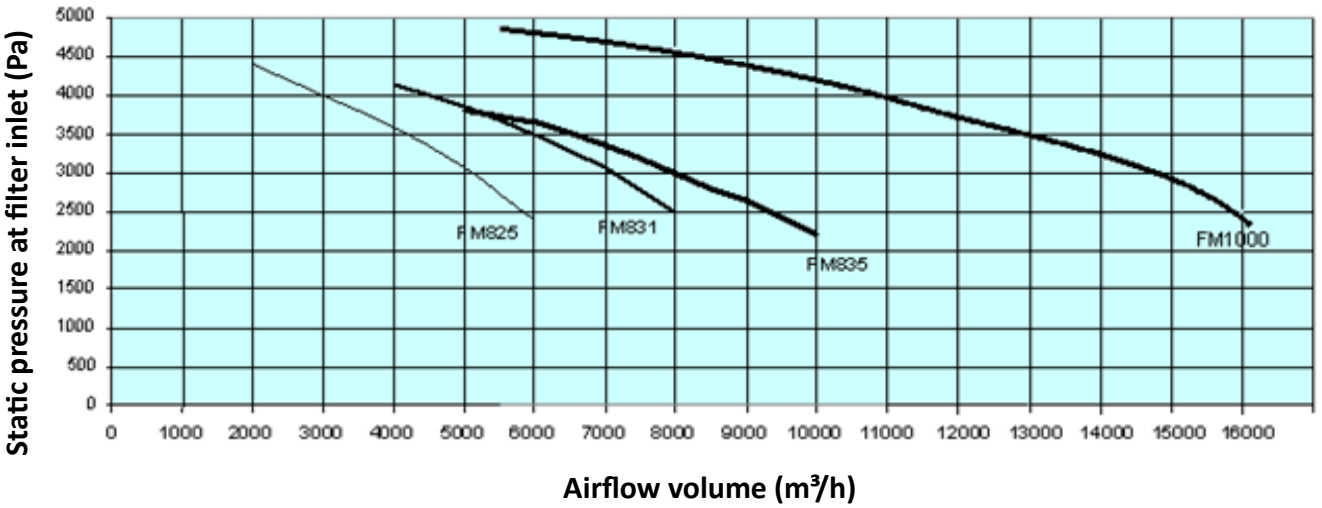

2.4 Electric connection conditions

NOTICE

Electrical connections must be checked prior to commissioning the machine / plant for the first time and tightened if necessary!

Voltage variances in excess of plus/minus 10 % are not permitted.

Installation of supply connections may only be carried out by appropriately trained qualified personnel who have knowledge of the requirements of local power supply companies and who also apply that knowledge.

Regulations of current valid national directives are to be observed for the connection of the plant / machine.

2.5 Operating pressure and compressed air quality

ATTENTION

Non-compliance can lead to property damage!

Do not exceed the maximum operating pressure of 7 bar.

NOTICE

The cartridge cleaning system requires a compressed air supply of at least 6.0 bar (max. 7 bar).

At ambient temperatures below 0 °C, the service unit must be insulated to be frost-proof.

The quality of the compressed air used must comply with the specification of ISO 8573-1.

The filter shall be supplied with compressed air with the content of oil, moisture and solids given in the following table according to ISO 8573-1: *Compressed air- Part 1: Contaminants and purity classes.*

Compressed air purity classes according to ISO 8573-1

Compressed air purity	Class
for particles	2
for moisture and liquid water with temp. T* > +3°C	4
for moisture and liquid water with temp. -20°C < T* < +3°C	3
for moisture and liquid water with temp. -40°C < T* < -20°C	2
for oil	1

* T - temperature range

The pressure dew point should be below -20 ° C for filters installed outdoors. In the case of filters installed in heated rooms, compressed air moisture corresponding to a pressure dew point of + 3 ° C is allowed.

The optimal way to connect the dust collector pressure tank to the local network is to use a pressure reducing valve with a combined solids, oil and water separator. A safety valve must be installed when the supply pressure exceeds 7 bar.

3 Fundamental safety instructions

3.1 Product safety

The machine / plant is manufactured according to the safety specifications of the EU, which are current at the time of delivery. Depending on the location, the relevant national legal regulations must be observed!

Nevertheless, danger to life or limb of the operator or third parties and / or damage to the machine/plant and other property may occur as a result of using the machine / plant.

- ➔ Only use the machine / plant in a technically perfect condition and in accordance with regulations, in a safety- and risk-conscious manner under observation of the instructions.
- ➔ Any faults that may restrict safety must be rectified immediately.

Any alterations or modifications to the machine / plant are forbidden unless explicitly approved by the manufacturer in writing. This also applies for the installation and adjustment of safety devices as well as welding on load-bearing parts. Non-compliance results in warranty invalidation.

3.2 Tasks of the operator

3.2.1 Staff selection and qualifications

Qualified personnel may only undertake work on the machine / plant.

The owner may only authorised persons with the independent operation or maintenance of the machine / system who meet the following requirements:

- ➔ Persons who have reached the age of 18.
- ➔ Persons who are physically and mentally suitable.
- ➔ Persons who can be expected to discharge their assigned tasks reliably.
- ➔ Persons who have been instructed with regard to operation and maintenance of the machine / plant and have proved their aptitude to the owner.

In addition to providing theoretical knowledge, instruction also includes the opportunity to acquire sufficient practical experience, as well as to acquire the ability to recognize defects jeopardizing safety at work.

The tasks assigned to operators and technical personnel must be clearly defined by the owner.

The following points must be observed in order to avoid accidents involving personal injury and / or property damage:

- ➔ Reliable members of staff may only carry out work on/with the machine / plant.
- ➔ Only deploy trained or instructed personnel. Clearly define the areas of responsibility of the operating, maintenance and repair staff.
- ➔ Staff who are undergoing training and instruction or general vocational training may only be permitted to work on the machine / plant under the constant supervision of an experienced member of staff.
- ➔ Work on the electrical equipment of the machine/plant may only be carried out by a qualified electrician or by trained staff under the charge and supervision of a qualified electrician in accordance with electrical engineering regulations. Qualified personnel must be aware of the requirements of the local power supply companies and must put this knowledge into practice.
- ➔ Only staff with special knowledge and experience with pneumatics may work on pneumatic facilities.

3.3 Safety measures by personnel

3.3.1 Safety-conscious work behaviour



WARNING

Risk of injury!

Non-compliance can lead to death or serious injury!

Anyone under the influence of drugs, alcohol or medications affecting reactive capabilities may not assemble, start-up, operate, maintain, repair or dismantle the machine / plant.

➔ Personal protective equipment is to be worn if necessary or stipulated by regulations.
➔ The safety and warning instructions listed in this manual and the warning signs mounted on the machine / plant are to be observed.

3.3.2 Operator's tasks

➔ Only operate the machine / plant if all safety/protective devices are in place and functioning.
➔ Before starting the machine/plant, make sure that the machine starting up will endanger no one.
➔ An inspection tour is to be carried out at least once a week whilst the machine / plant is in operation. This inspection tour shall include a general examination of the complete system:
  – Check machine / plant externally for visible damage and defects and reported them to the responsible department / person.
  – If necessary, shut down the machine / plant immediately.
➔ In the event of any functional faults, shut down the machine / plant immediately, switch off and lock respective main switch. Report faults to the responsible department / person and have they rectified.

3.4 Risks

All of our machines/plants conform to the latest industry standards and are safe to operate when used as intended.

In order to prevent workplace accidents and damage, potential hazards have been removed as far as possible in the design of the machine/plant.

Protection against remaining danger areas has been provided by:

- Mechanical safety devices
- Warning devices such as warning signs

Nevertheless, danger to life or limb of the operator or third parties and/or damage to the machine/plant and other property may occur as a result of using the machine/plant.

- Danger from moving parts
- Danger from faults in controls through unexpected movements deviating from normal work procedures

3.5 Technical components of the safety system

3.5.1 Protective facilities

WARNING

Rotating or moving parts!

Non-compliance can lead to death or serious injury!

Operating the machine / plant without safety devices is strictly forbidden!

➔ Check safety devices for fully functional.

Danger points and areas, which have to be in view or directly accessible to operating or qualified personnel for inspection and/or maintenance work, are safeguarded by:

- Mechanical safety devices
- Warning devices such as warning signs

3.5.2 Danger, warning and information (“Note”) signs

Warning signs attached to the machine/plant are intended to attract the attention of personnel to danger points on the machine/plant.

➔ Observe all instructions on the warning signs.
➔ Replace any missing or damaged warning signs immediately.

3.6 Fire protection

NOTICE

Operators must observe the relevant laws and regulations in each country!

The operator must ensure that burning / glowing parts cannot enter the machine / plant with the personnel appointed to undertake maintenance / inspection work!

This note relates only to safety aspects (conduct of the personnel during maintenance / inspection work on the machine / plant) and not to the plant's production technical design.

The operator must inform external contractors accordingly. They are obliged to obtain information on the possible hazards from the member of staff responsible for the area concerned.

3.6.1 Action in the event of fire

DANGER

Danger of poisoning from pollutants!

Non-compliance will result in death or serious injury!

➔ Wear personal protection equipment, clothing and breathing mask.

WARNING

Danger of burns from intense heat!

Non-compliance can lead to death or serious injury!

➔ Keep the doors and the inspection openings of the machine / plant closed in the event of a fire.

If a fire is suspected or actually breaks out:

➔ Press button **"EMERGENCY STOP"**

Make sure that the machine / device equipped with the control system has turned off automatically, i.e. the mounted fan and the filter cleaning system are turned off.

➔ Close all existing manually operated dampers in the piping system.
➔ Prevent fresh air supply.
➔ Switch off electrical consumers.
➔ Call the fire department.
➔ Cooling of the machine / plant from the outside by the fire department.

3.6.1.1 Residual material

DANGER

Danger of poisoning from pollutants!

Non-compliance will result in death or serious injury!

Residual material contains pollutants from the dirty gas.

➔ Personal protective equipment must be worn in the case of direct contact with residual material.

4 Explosion protection

DANGER

Explosive atmosphere!

Non-compliance will result in death or serious injury!

The following activities are strictly forbidden whilst the machine / plant is in operation:

➔ Accessing / Mounting the machine / plant.
➔ Working on the compressed air system.

DANGER

Explosive atmosphere!

Non-compliance will result in death or serious injury!

Constructional measures that prevent the free discharge of explosions by the explosion relief elements are not permitted, e.g.:

➔ Enclosing the machine / plant.
➔ Connection of channels / ducts.
➔ Covering with panels or drapes.

NOTICE

Technical explosion decoupling of the machine / plant from other connected plant sections must be ensured using suitable protection systems.

Technical explosion protection consists of three principle possibilities.

- Primary explosion protection:

  Prevention or restriction of the occurrence of hazardous potentially explosive atmospheres by reducing or replacing combustible substances, ventilation systems, inertization.

- Secondary explosion protection:

  Prevention of the ignition of hazardous potential explosive atmospheres by ensuring there are no ignition sources.

- Constructive explosion protection:

  Restriction of explosion sources to a harmless level by the implementation of measures such as explosion relief, explosion suppression or explosion-resistant design.

Although the machine / plant does not actually have any own ignition sources, it is not possible to rule out integration of an ignition source into the machine / plant by third parties and consequently, the machine/plant is protected by constructive explosion protection.

4.1 ATEX designation

With regard to the requirements of Directive 2014/34 / EC and ISO EN 80079-36 product is marked as follows:

Filtr

CE  **II 1D(3D)/- c Ex h IIIC 120°C Da(Dc)/-**

Wentylator

CE  **II 3D/- c Ex h IIIB 120°C Dc/-**

CE - European mark of conformity (French: **C**onformité **E**uropéenne).

Ex - marking of protective system intended for use in potentially explosive atmospheres, according to the provisions of Directive **2014/34/UE.**

II - equipment group.

1D(3D)/- - marking of the filter protection system intended for use in potentially explosive atmospheres due to the presence of dust.

Optional filter can be adapted to work with the atmosphere outside, he will have a mark:

1D(3D)/3D

3D/- - designation of the protective system of the fan intended for use in potentially explosive atmospheres due to dust presence.

Optional fan can be adapted to work with the atmosphere outside, he will have a mark:

3D/3D

c - type of ignition protection.

Ex h - marking of compliance with the level of protection of the equipment.

IIIC - dust group for the filter.

IIIB - dust group for the fan.

°C - maximum surface temperature.

Da(Dc)/- – internal / external protection level of the filter.

optionally, the filter can be adapted to work with the outside atmosphere, it will be marked:

Da(Dc)/Dc

Dc/- – internal / external protection level of the fan

optionally, the fan can be adapted to work with the atmosphere outside, it will be marked with:

Da/Dc

4.1.1. Area classification in the filter

The MCP / MEP Ex dust collector is part of the entire dust extraction system. The interior of the dust collector is classified according to Directive 2014/34 / EU as:

- **zone 20** in the dirty air chamber,
- **zone 22** in the clean air chamber.

4.2 Establishment and marking of the safety zone

DANGER

Explosive atmosphere!

Non-compliance will result in death or serious injury!

A safety zone must be set up and marked in the area of the blow direction of the explosion relief elements (only in cases of horizontal or angled arrangement).

The size of the safety area to be prepared in accordance with ***PN-EN 14491 6.2. Flame effects***, is shown in the sketch below.

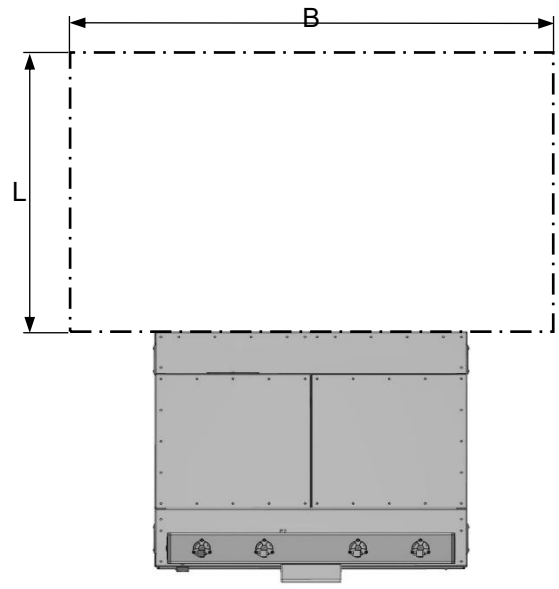

Typ	MCP-2-8S*-Ex MEP-2-** Ex	MCP-4-16S*-Ex MEP-4-** Ex	MCP-6-24S*-Ex MEP-6-** Ex	MCP-8-32S*-Ex MEP-8-** Ex
Width of the safety zone (B) at least [m]	4	5	6	7
Length of the safety zone (L) at least [m]	11	13	15	17

* standard (S) or low (SL) filter height

** number of rows of filters per cassette, 4 or 6

The safety area must be clearly marked, for example with fencing, warning tapes and signs, and must be inaccessible when the machine / device is in operation. The area must be free from flammable and explosive substances or other elements that can be damaged by flames and explosion pressure.

4.3 Establishment and marking of the safety zone – flameless pressure relief devices

DANGER

Explosive atmosphere!

Non-compliance will result in death or serious injury!

A safety zone must be set up and marked in the area of the blow direction of the explosion relief elements (only in cases of horizontal or angled arrangement).

Please see the attached operating instructions from the manufacturer of the flameless explosion venting device for information on the size of the safety zone to be installed.

The safety zone must be marked in a clearly visible manner.

4.4 Conduct in the safety zone

DANGER

Explosive atmosphere!

Non-compliance will result in death or serious injury!

The following is **not** permitted in the safety zone:

- ➔ Persons loitering in the safety zone whilst the machine / plant is in operation.
- ➔ Setting up storage areas.
- ➔ Storage of fuel or lubricants.
- ➔ Storage of other flammable substances.
- ➔ Installing other process equipment which could lead to further explosions / fires.

These rules of conduct must be observed without fail by all employees.

4.5 Equipment

NOTICE

The protective measures applied exclusively relate to the machine / plant supplied by us.

The machine / plant can be equipped with special components:

- Explosion vent installed on the filter
- Rotary valve Type: NRSZ3

The following precautions must be taken:

➔ Regular cleaning to remove dust deposits from the surface of all machine / plant parts.

The surface of the machine / plant parts must be visible. Cleaning intervals must be specified by the owner.

➔ Regular inspection of explosion vents (→ section **"Supplier documentation"**).
➔ Regular inspection of door seals.
➔ Regular inspection of earthing straps.
➔ Regular inspection of the safety zone.
➔ Regular cleaning of the safety zone.

4.6 Measures following an explosion

The following measures must be applied following an explosion:

➔ All machine/plant parts must be examined for signs of damage and any deformed parts replaced.

4.7 Use of tools in areas with potentially explosive atmosphere



NOTICE

The owner must ensure that the personnel entrusted with maintenance / inspection work is informed with regard to the safe use of tools in areas with potentially explosive atmosphere!

The use of tools in zones 21 and 22 should form the subject of a system of "Work permits / licences".

Grinding and cutting work in or near zones, 21 and 22 can produce sparks capable of flying over large distances and leading to the formation of smoulder spots. For this reason, the remaining area around the work area should also be included in the required safety measures.

A distinction is made between two types of tools:

a) Tools, which can produce a single spark when used (e.g. screwdrivers, wrenches, impact wrenches).
b) Tools, which produce a whole series of sparks when cutting and grinding.

Tools capable of producing sparks are prohibited in zone 20.

Steel tools of the type described in paragraph a) may be used in zones 21 and 22.

Steel tools of the type described in paragraph b) may only be used if the work area is isolated from the remaining area of zones 21 and 22 and if the following steps have been implemented additionally:

- Dust deposits have been removed or
- the work area is kept sufficiently damp to prevent dust being swirled up and/or smoulder spots being produced.

5 Structure and function

5.1 Structure – silo filter

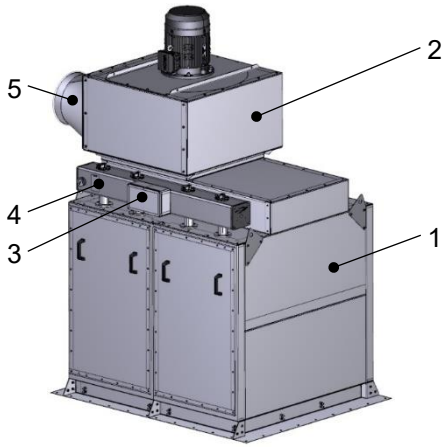

1 Filter
2 Built-in fan*
3 Valve box
4 Compressed air facility
5 Clean gas connection *

* The filter can be optional fanless

5.2 Structure – standard filter

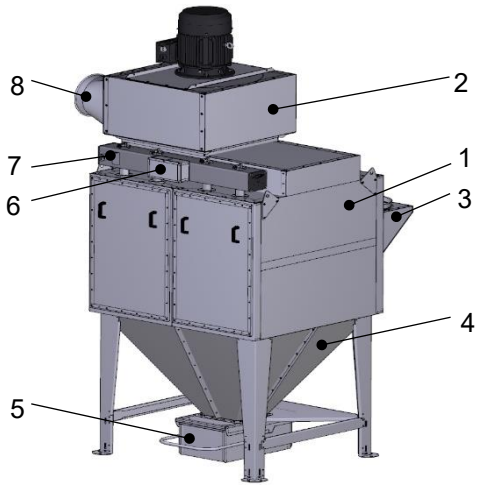

1 Filter
2 Built-in fan*
3 Dirty gas connection
4 Dust collection hopper with support structure
5 Dust bin
6 Valve box
7 Compressed air facility
8 Clean gas connection*

* The filter can be optional fanless

5.3 Structure – rotary valve filter

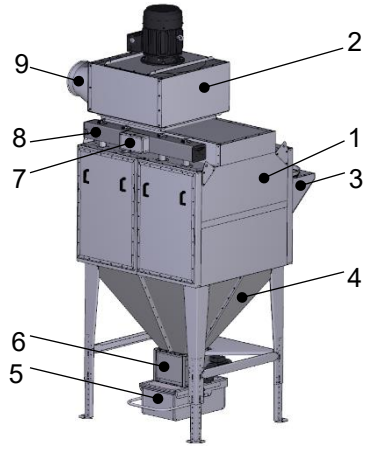

1 Filter
2 Built-in fan*
3 Dirty gas connection
4 Dust collection hopper with support structure
5 Dust bin
6 Rotary valve
7 Valve box
8 Compressed air facility
9 Clean gas connection*

* The filter can be optional fanless

5.4 Structure – filter with rotary valve and BIG-BAG

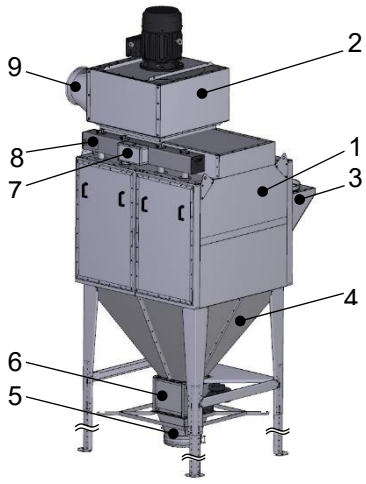

1 Filter
2 Built-in fan*
3 Dirty gas connection
4 Dust collection hopper with support structure
5 BIG-BAG holder
6 Rotary valve
7 Valve box
8 Compressed air facility
9 Clean gas connection*

* The filter can be optional fanless

5.5 Function

NOTICE

In order to guarantee trouble-free operation, the maintenance instructions (→ section “Maintenance”) are to be observed.

NOTICE

In the case of a short installation of dusty air, it is recommended to install a backflow preventer to prevent dust from escaping during cleaning with the fan turned off..

NOTICE

The dusty air goes through the inlet port located at the back of the device to the dirty chamber, where a significant change in air velocity occurs and larger particles fall into the tank.

A separating partition located behind the filter inlet nozzle increases the efficiency of dust separation and ensures an even velocity profile through all filter elements ensuring their even load.

The dirty gas streams through the filter elements to the clean gas chamber. Dust is collected on the outer surfaces of the filter elements.

Dust is cleaned of fully automatically (online effect) as dust contamination takes place. The compressed air pulse against the filter direction inflates the filter element. This results in adhering dust being cast off.

The filter cleaning system is controlled fully automatically. The pulse / pause ratio and other parameters are adjustable.

At a pressure difference of more than 2300 Pa, the filter monitoring triggers an alarm.

The separated dust is collected in a container under the hopper or removed by a rotary valve, e.g. to an external container or Big-Bag.

The fan draws in the clean gas and discharges it to the atmosphere or back to the production facility.

Some filter versions are W3 certified according to DIN EN ISO 15012-1. For those units where the degree of filtration over 99%, harmful substances such as smoke and dust, resulting from welding of high-alloy steels, containing e.g. 30% or more nickel and chromium, are reliably filtered.

5.6 Cleaning the filter cartridges

5.6.1 Description of the components

Structure

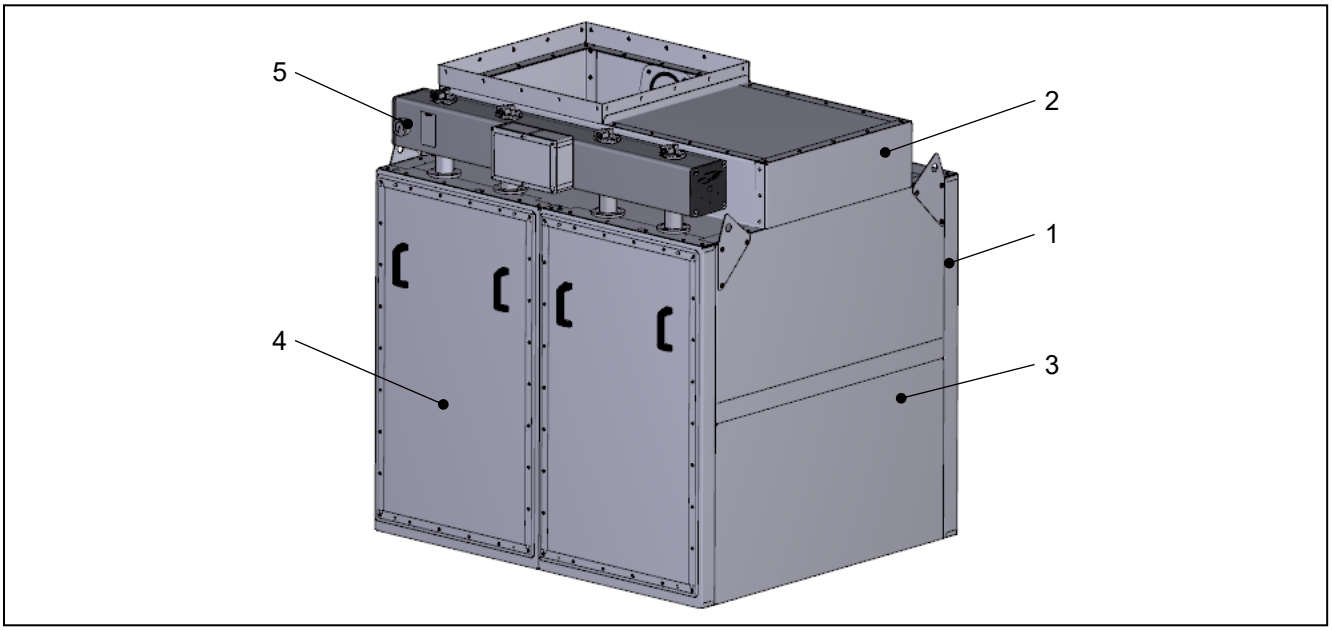

1 Housing
2 Clean gas chamber
3 Dirty gas chamber
4 Inspection door
5 Compressed air facility

Cleaning cycle

NOTICE

For the operating pressure and quality of the compressed air (→ section “Operating pressure and compressed air quality”).

The filter elements are cleaned by compressed air pulses. The cleaning takes place during operation (online effect).

When the set differential pressure is reached, filter cleaning (cleaning cycle) is automatically started.

The cleaning cycle is repeated as often as necessary until a minimum value for differential pressure has been reached.

The cleaning cycles are dependent on the type of dust and the dust and/or pollutant content in the dirty gas.

Sequence cleaning cycle

NOTICE

Factory settings (→ section "Supplier documentation" → "Operation instructions Insight Control Panel").

The following cycle begins when a cleaning is initiated:

- Membrane valve 1 opens
- Pulse time
- Membrane valve 1 closes
- Pause (pause time 1 or pause time 2)
- Membrane valve 2 opens
- Pulse time
- Membrane valve 2 closes
- Pause (pause time 1 or pause time 2)
- ...

Differential pressure measurement

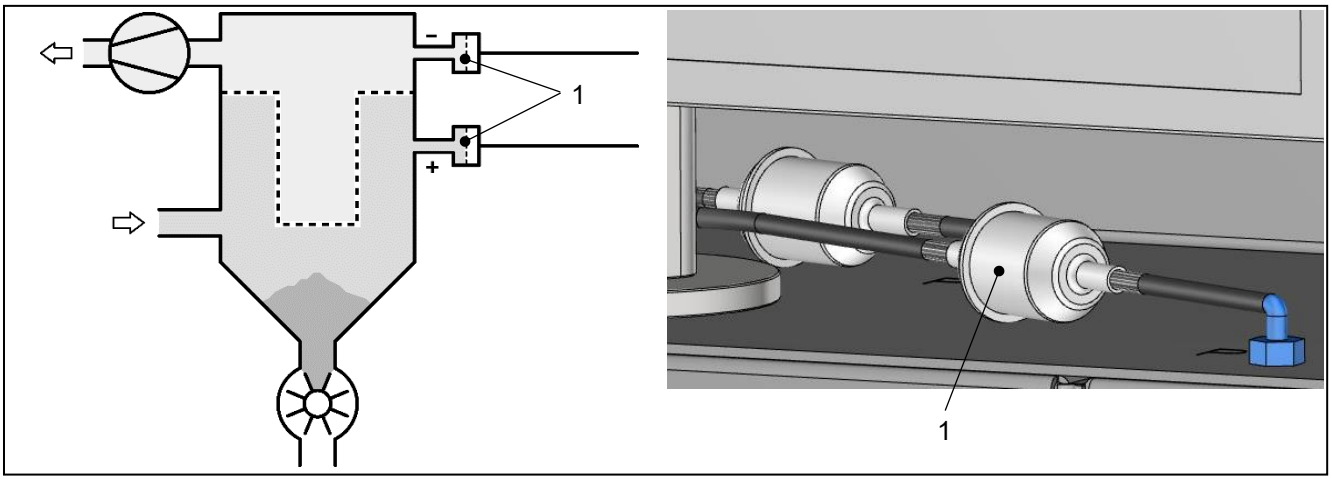

1. Air filter - available in Atex version

NOTICE

A pressure meter must be installed for monitoring operation if the filter is part of a system where filter operation is not directly apparent. This applies in particular to systems where a filter failure could result in dangerous situations.

5.6.2 Built-in fan

Structure

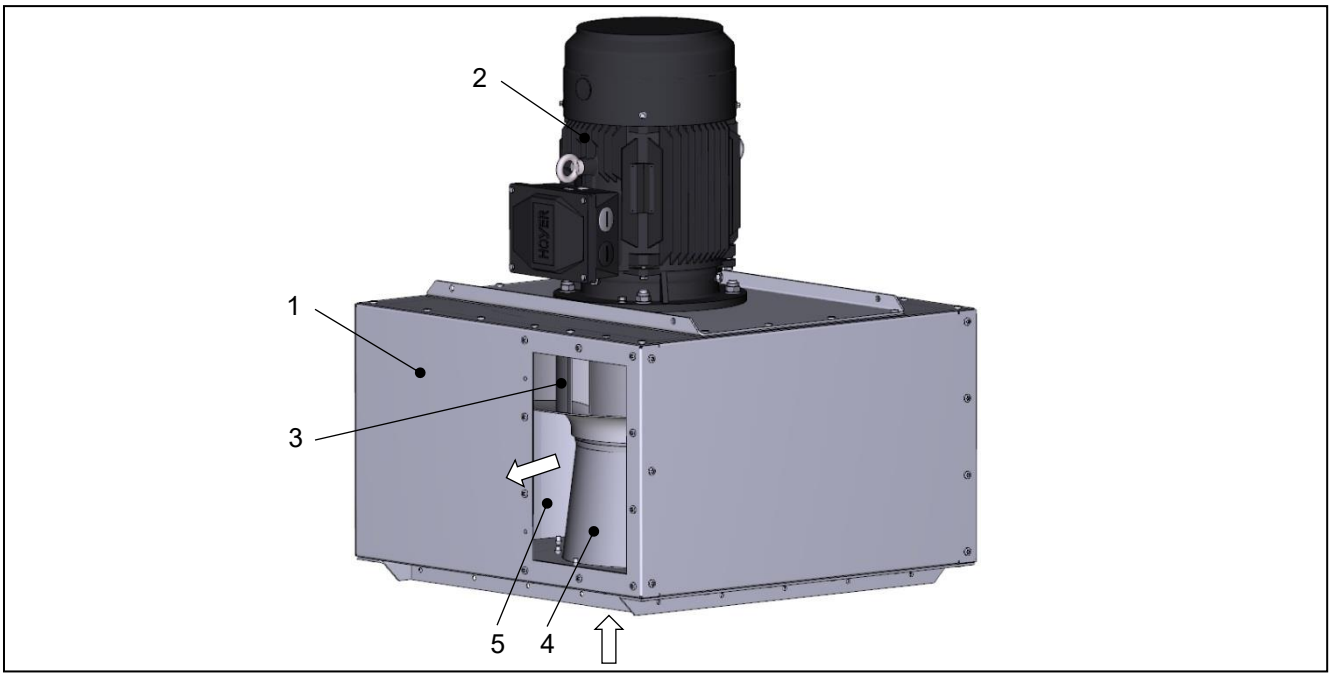

1 Housing
2 Three-phase AC motor
3 Impeller
4 Intake opening
5 Exhaust opening
⇨ Air flow

Function

The built-in fan is suitable for conveying gaseous, dust-free and non-explosive media.

The rotation of the impeller sucks the gaseous medium in through the intake opening and blows it out through the exhaust opening. At the same time, a negative pressure is created in the pipeline system which is connected to the filter.

5.6.3 Single flap valve – manually operated – NFUS3

Structure

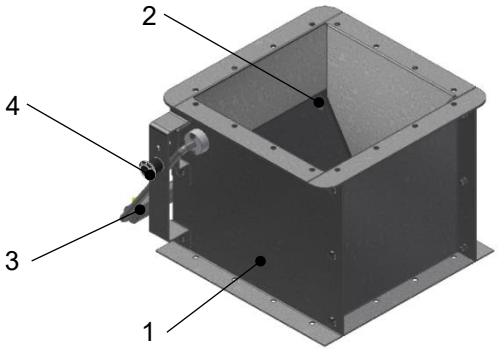

1 Housing
2 Flap
3 Lever arm
4 Pin

Function

The single pendulum flap is used for shutting off the dust discharge.

Lever arm (3) in lower position: Flap (2) closed.
Lever arm (3) in upper position: Flap (2) open.

NOTICE

The lever arm (3) has to be locked in its respective position using the pin (4).

NOTICE

The lever arm (3) must be locked in its lower position using the pin (4) before pulling out the dust container underneath the single pendulum flap. The flap (2) remains closed. This prevents any further discharge of dust. The dust container can now be emptied during operation.

NOTICE

The single flap valve shall not be used as an ATEX safety valve while the filter is in operation.

6 Operation Site

6.1 Location and foundation requirements

NOTICE

Easy handling of separated dust and alleviation of service and maintenance work should be taken into account when positioning the filter.

The location must be free of objects such as power cables etc.

The anchoring bolts (M16) must protrude out of the foundation by at least 60 mm.

The foundation must be prepared accordingly if the filter unit is to be secured with the help of expansion bolts.

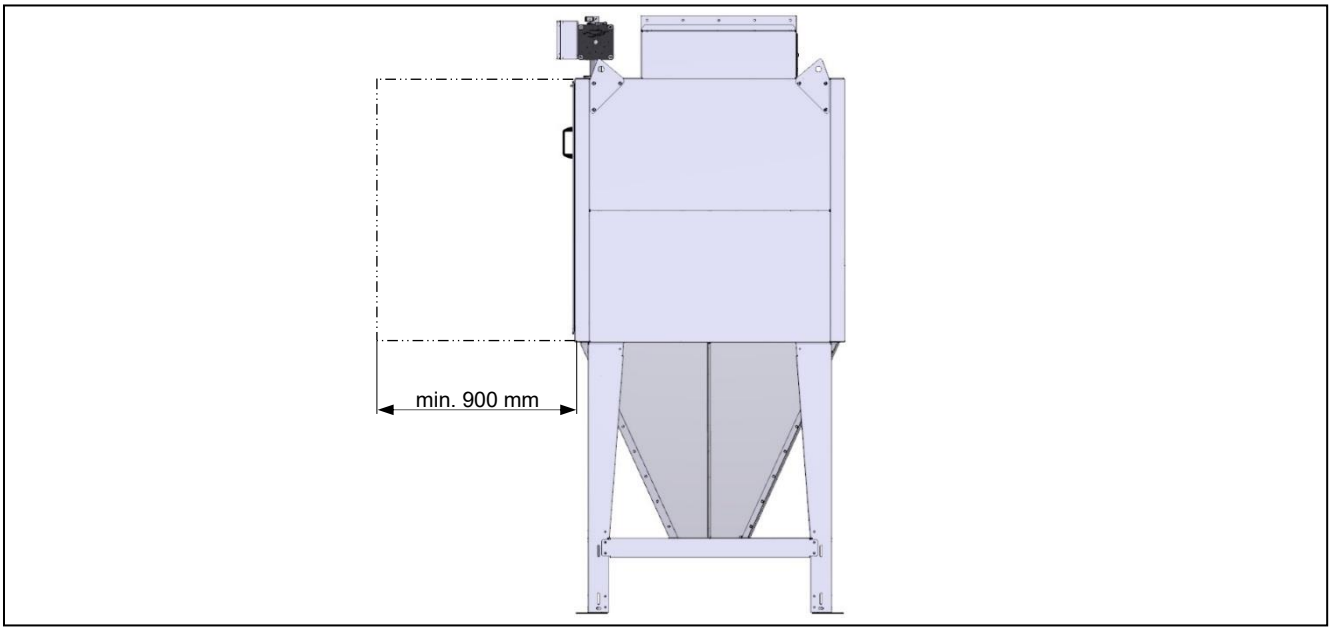

The filter is usually positioned on a reinforced concrete foundation. It is possible, however, to place the filter on a different type of foundation. The following factors must be taken into consideration for the calculation of the foundation or supporting structure:

- Maximum weight of the filter (→ rating plate)
- Maximum weight of the separated dust

6.2 Permissible ambient conditions

Permissible ambient conditions for the control cabinet → section **"Supplier documentation"** → **"Operation instructions Insight Control Panel"**.

The geared motors and three-phase motors are designed for an ambient temperature range of -20°C to +40°C and installation heights of up to 1000 m above sea level.

Intake air for cooling gear motors and three-phase motors must not exceed +40°C and may not be contaminated with potentially explosive gases or dusts.

7 Transport and delivery

NOTICE

The transport of the components may take place only in areas, where no explosive atmosphere is present.

7.1 Transport

7.1.1 Component supply

NOTICE

The assembly instructions must be observed when assembling components.

The individual components are supplied pre-assembled on pallets.

The components are secured on pallets by straps and bolts.

7.1.2 Transport by pallet truck or fork-lift truck

DANGER

Falling machinery parts!

Non-compliance will result in death or serious injury!

- ➔ Cordon off danger area with suitable marking and barrier elements.
- ➔ Appoint supervisor to monitor the danger areas during transport.
- ➔ **Only** use approved load hoisting means with adequate load-bearing capacity.
- ➔ Secure machine parts.
- ➔ Drive slowly and safely.

NOTICE

The choice of load hoisting means and the operation of the load hoisting equipment may only be carried out by appropriately instructed and appointed persons.

7.1.3 Transport by crane

DANGER

Falling machinery parts!

Non-compliance will result in death or serious injury!

- ➔ Cordon off danger area with suitable marking and barrier elements.
- ➔ Place **"Standing under suspended loads forbidden"** sign in a clearly visible position.
- ➔ Appoint supervisor to monitor the danger areas during transport.
- ➔ **Only** use approved load hoisting and handling equipment with adequate load-bearing capacity.
- ➔ Handling equipment may **only** be connected to designated hoisting points on machine parts when lifting.
- ➔ Pipeline parts may **only** be lifted using the designated hoisting points or a non-slip plastic rope.
- ➔ **Do not stand or walk** under suspended loads.

NOTICE

The choice of load hoisting means and the operation of the load hoisting equipment may only be carried out by appropriately instructed and appointed persons.

7.2 Packaging

NOTICE

Correct packaging must be ensured in the event of any further transportation carried out by the customer.

The individual parts of the machine/plant are correctly packed for transportation to the shipping point or point of installation.

The type of packaging depends on the transportation route and transport means.

Disposal of packaging material

- ➔ Dispose of packaging material in accordance with local regulations.
- ➔ Comply with any symbols on the packaging.

7.3 Checking supplied components

Upon receipt of delivery, check that all parts are present and that no parts have been damaged.

Please contact us immediately if any parts are missing or have been damaged in transit.

8 Storage and Conservation

NOTICE

The storage of the components may take place only in areas, where no explosive atmosphere is present.

NOTICE

The manufacturer / supplier accepts no liability for damages and subsequent damage arising from improper or incorrect storage.

In addition, the specific regulations of the respective suppliers must be observed for the storage and conservation.

8.1 Storage of components

If individual components are being stored at a different location prior to final assembly and installation of the machine / plant, they must be stored in a dry location protected against adverse weather conditions.

Furthermore, the components must be protected against aggressive atmospheres and other damaging influences of any type whatsoever.

The condition of the anti-corrosion layer must be checked regularly and any damage repaired (→ section **"Maintenance and inspection of the conserved machine / plant"**).

8.2 Conservation of the machine/plant

The following measures must be observed and complied with if the machine/plant is going to be shut down for a certain period of time (1 month or more):

➔ The machine / plant must be run until completely empty, i.e. test operation (→ section **"Supplier documentation"** → **"Operation instructions Insight Control Panel"**), must be activated prior to shutting down the machine / plant in order to avoid dust deposits.

➔ The dust bin must be emptied.

8.2.1 Maintenance and inspection of the conserved machine / plant

Interval Control point / Action

Every 2 weeks

- Filter
  Start test operation (→ section **"Supplier documentation"** → **"Operation instructions Insight Control Panel"**) and run Down-Time-Cleaning operation.
- Motor-operated components
  ➔ Run for approx. 5 minutes.

Every 2 month

- Anticorrosion layer
  ➔ Check for corrosion

8.2.2 Measures prior to commissioning after shutdown

No further measures are required if the prescribed checklist has been observed and the machine/plant can be put back into operation in automatic mode.

9 Assembly

NOTICE

The individual components may only be slung at the lugs provided for this purpose!

NOTICE

The interior areas of all plant parts must be checked for foreign objects prior to assembly.

Any foreign objects must be removed.

NOTICE

The assembly of the components may take place only in areas, where no explosive atmosphere is present.

NOTICE

Observe the corresponding legal regulations for avoiding accidents in the respective country!

The machine / plant is supplied in assemblies and / or individual parts.

We recommend the machine/plant is assembled by our personnel or under the supervision of an assembly manager from us.

9.1 Tightening the screws

Tighten the self-tapping screws securely with the selected tool.

It is not necessary to apply a specific torque when tightening down the self-tapping screws.

NOTICE

Avoid repeated loosening and tightening of self-tapping screws, otherwise a fast and tight seal of the connection can no longer be guaranteed.

9.2 Earthing of the components

NOTICE

All components of the machine / plant, including adjacent components, must be conductively connected to each other.

Insulated plant sections must be provided with earthing connections and connected to each other with conductive connections.

9.3 Tools

Battery-powered or pneumatic impact screwdrivers are to be used.

9.4 Assembly filter

9.4.1 Silo filter

NOTICE

When raising the filter, a lifting beam must be used to ensure that the filter is raised into a vertical position.

➔ Seal the upper sealing flange on the silo with the provided sealing tape.

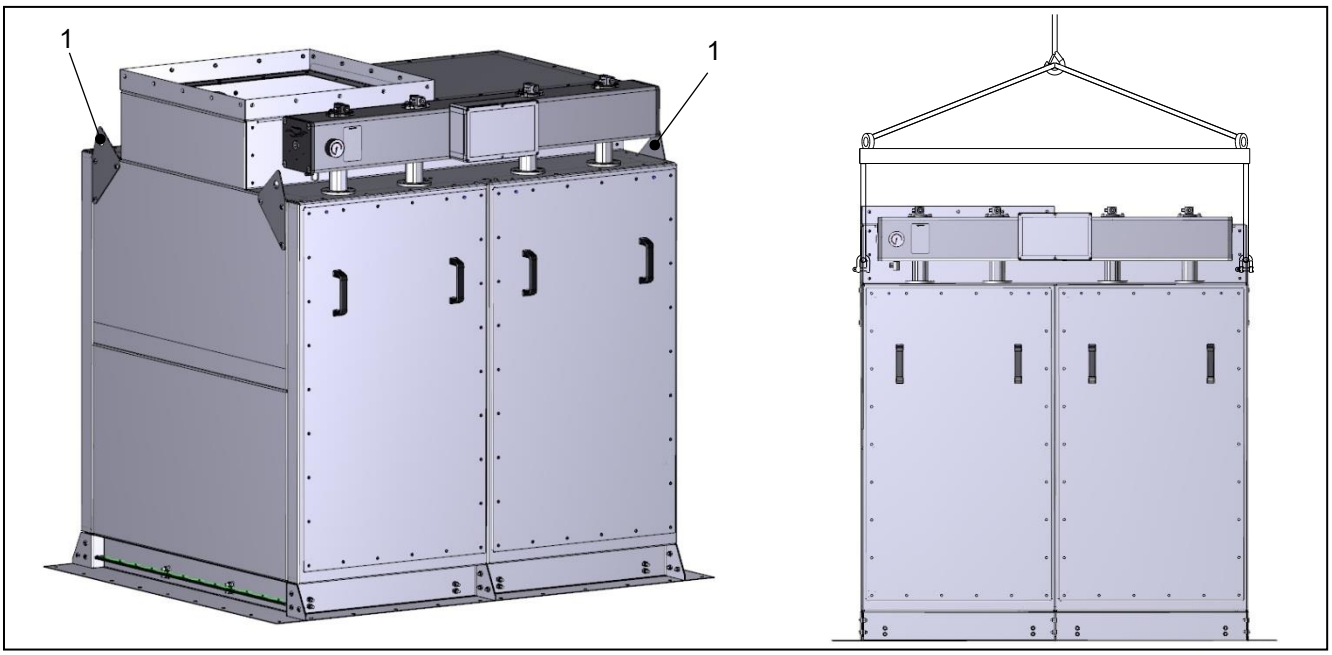

➔ Raise the filter with the help of a crane using the provided suspension lugs (1).
➔ Lower the filter slowly onto the silo.
➔ Drill the holes in the filter base frame (if necessary).
➔ Use bolts to screw the filter onto the silo.
➔ Tighten all bolts.

9.4.2 Filter

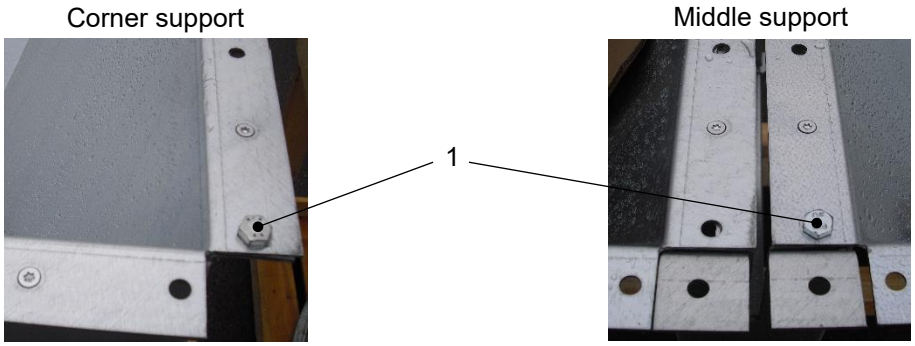

➔ Remove the securing screws (1) on the dust collection hopper. They are only provided as transport securers for the supports.

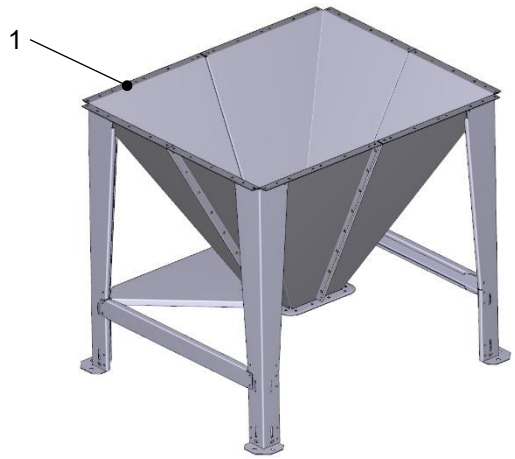

➔ Apply the provided sealing compound cord to the upper sealing flange on the dust collection hopper (1).

➔ Leave the dust collection hopper on the pallet.

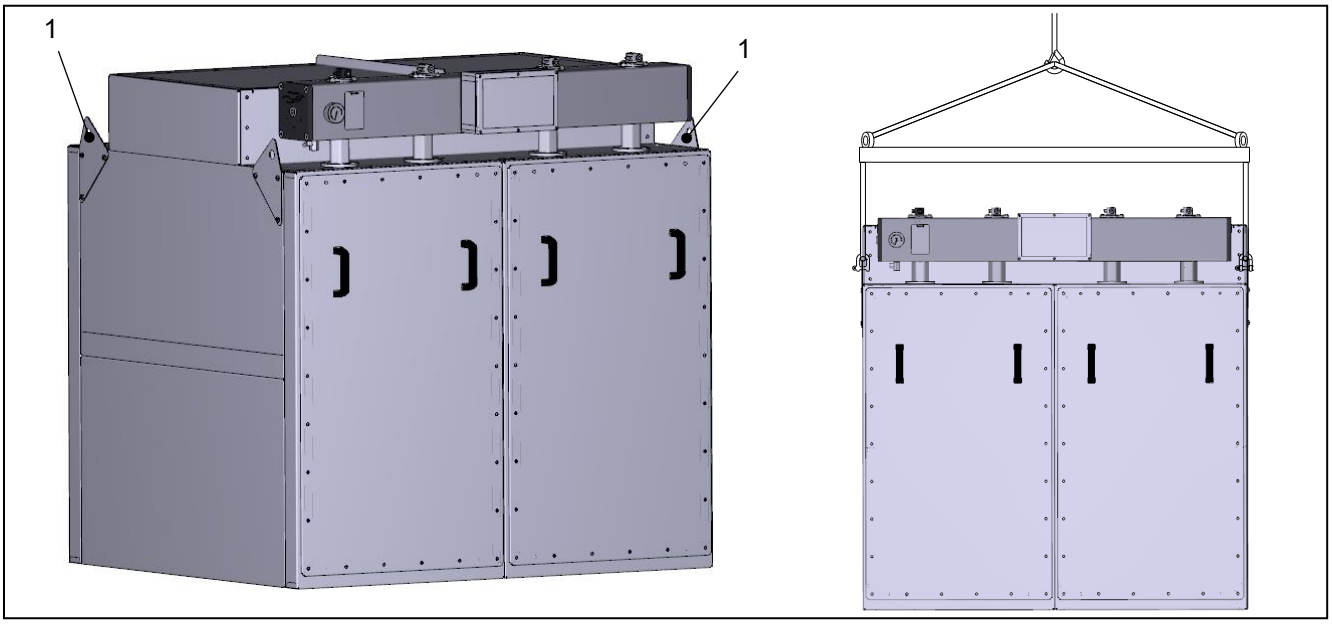

➔ Raise the filter with the help of a crane using the provided suspension lugs (1).

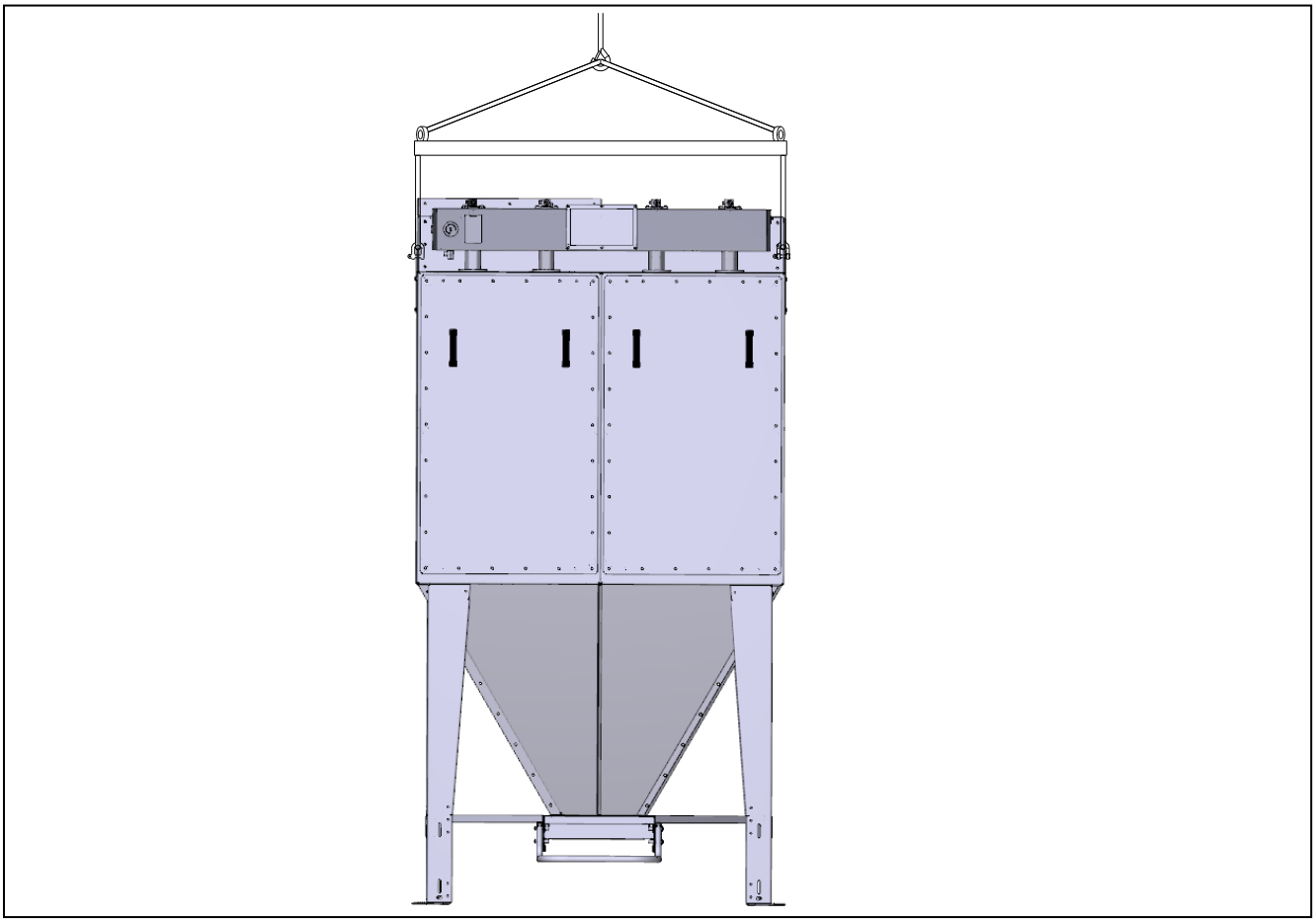

➔ Lower the filter slowly onto the upper sealing flange of the dust collection hopper, fix into place and lower completely onto the dust collection hopper.

➔ Screw the dust collection hopper and the filter together using self-tapping screws (M8 x 16 mm).

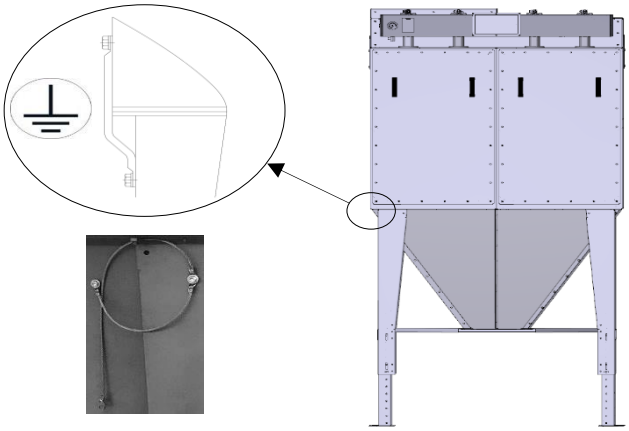

➔ Unscrew and remove the self-tapping screw in the filter housing.*
➔ Fasten the loose earthing cable on the dust collection hopper to the self-tapping screw on the filter.*
➔ Tighten all bolts.
* for ATEX version filters

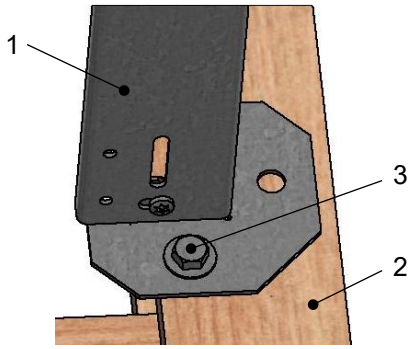

➔ Remove bolts (3) from the dust collection hopper supports (1) and the pallet (2).
➔ Place the filter together with the dust collection hopper on the prepared foundation base or the intended steel construction.*
* for filter without leg extension

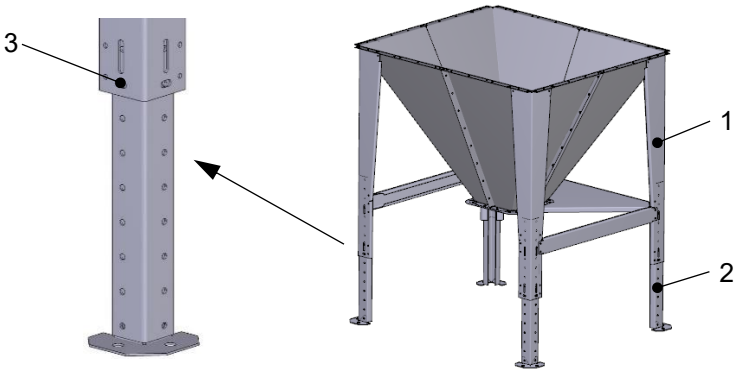

➔ Raise the filter together with the dust collection hopper (1) **

NOTICE

The support extensions are pushed into the respective supports and fastened with screws and nuts.

- ➔ Undo the screws (5) for the support extensions (4) and remove.**
- ➔ Pull the support extensions (1) out of the respective supports (4), set to the required height and fasten back in place again with the removed screws and nuts.
- ➔ Tighten all bolts.**
- ➔ Place the filter together with the dust collection hopper on the prepared foundation base or the intended steel construction.**
- ➔ Drill the fastening holes for the supports in the support base plates.
- ➔ Fasten the dust collection hopper's support base plates to the foundation using dowels or anchor screws or to the steel construction using bolts.

** for a filter with extended legs

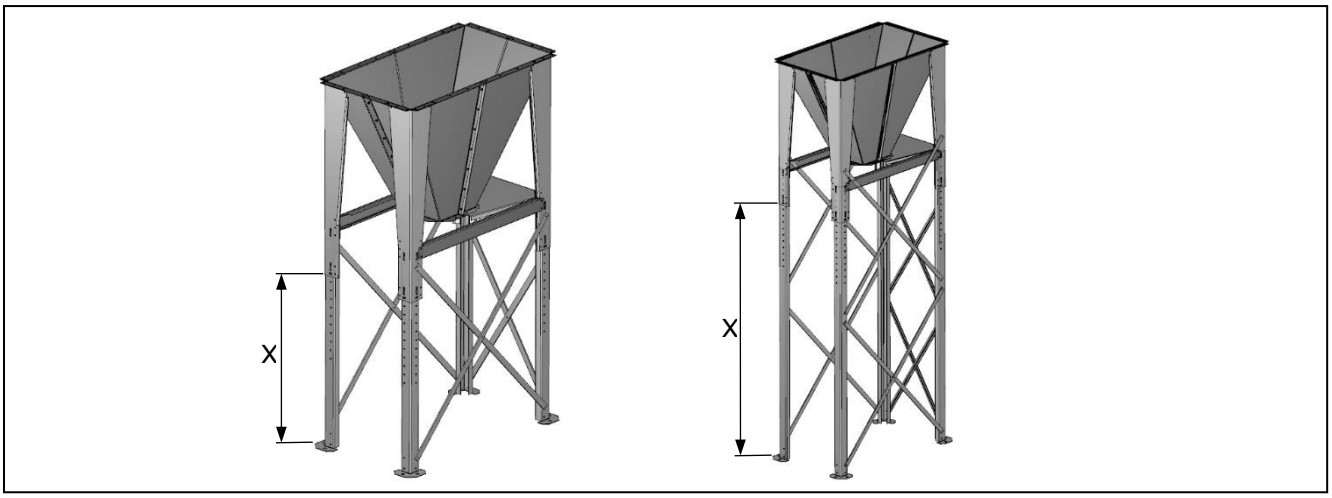

NOTICE

Wind bracing has to be installed in three axes of the dust collection hopper.

- **Height of the support extension (X) ≥ 750 mm or < 1350 mm: One wind brace per axis.**
- **Height of the support extension (X) ≥ 1350 mm: Two wind brace per axis.**

It may be necessary to drill the holes in the dust collection hopper supports for attaching the wind bracing.

- ➔ Fasten the wind bracing to the supports of the dust collection hopper using screws (M8 x 20 mm), nuts and washers.
- ➔ Screw the intersections of the wind bracing using screws (M8 x 20 mm), nuts and washers.

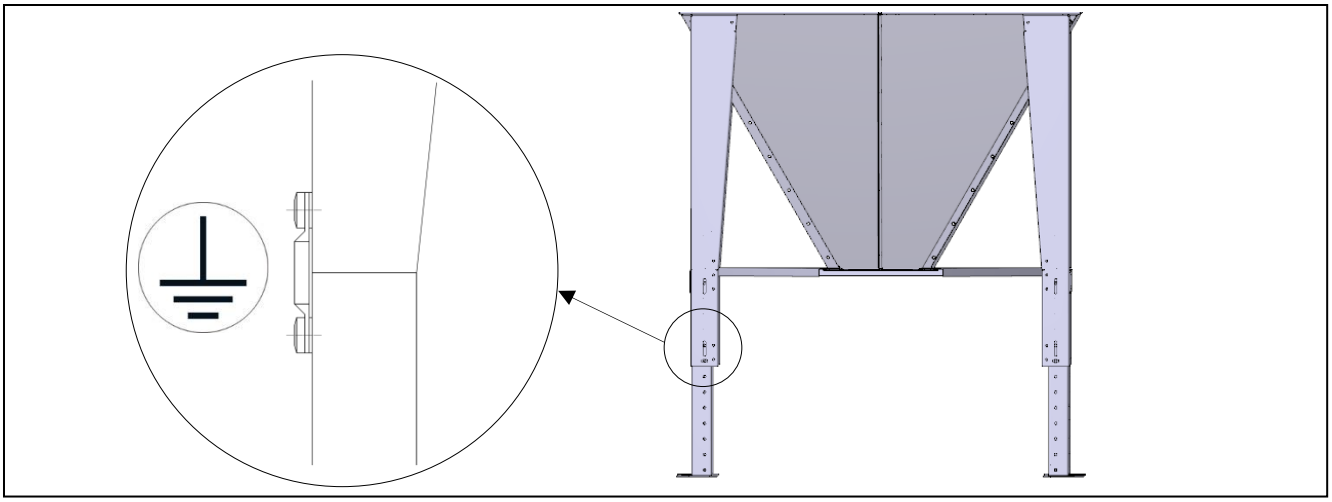

➔ Connect the earthing cable to the appropriate points.*
➔ Tighten all bolts.

* for ATEX version filters

9.4.3 Dust container

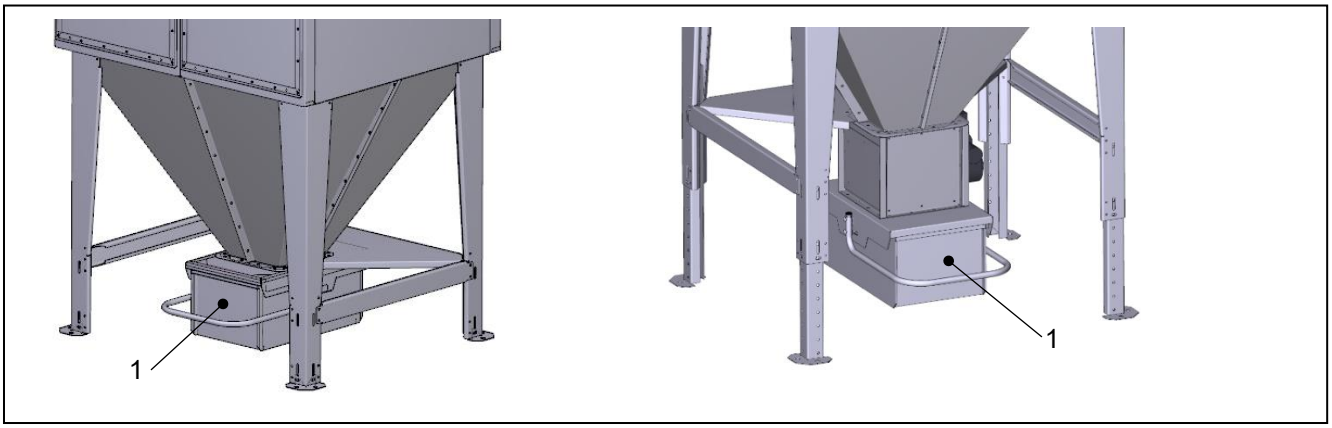

➔ Push the clamping lever on the dust collector hopper upwards.
➔ Push the dust bin in the rails underneath the dust collection hopper as far as it will go to the rear.
➔ Push the clamping lever down.

9.4.4 Built-in fan

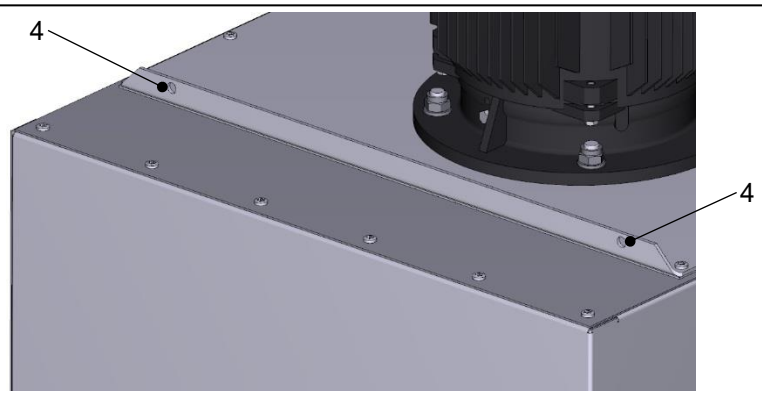

➔ Fit crane lifting lugs to the provided drillings (4) on the built-in fan (1).

NOTICE

The outlet can be fit to point to the left, the right or to the back.

The outlet cannot be fit to point to the doors.

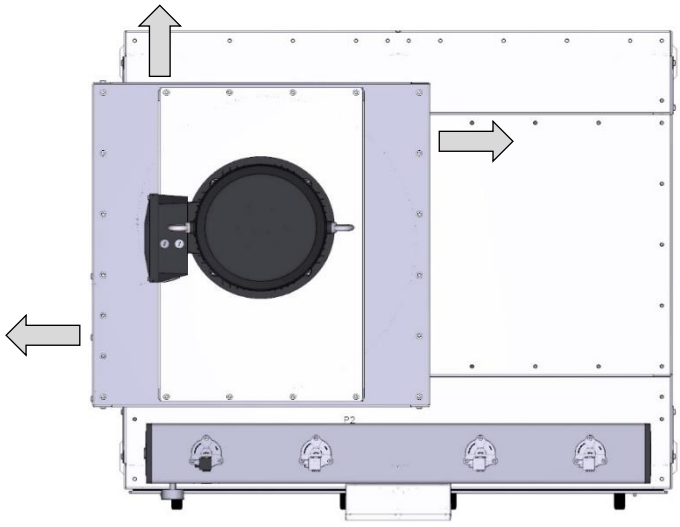

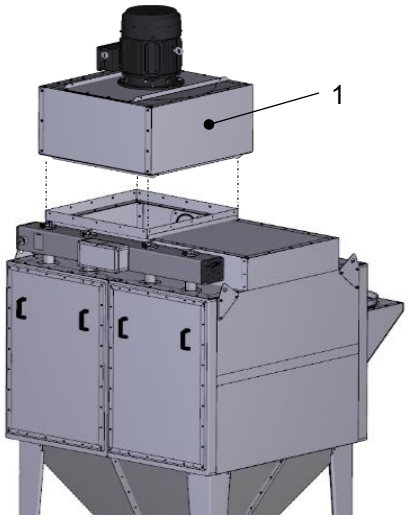

➔ Raise the built-in fan (1) by crane using shackles and position above the flange connection on the clean gas duct.
➔ Fasten the built-in fan (1) to the clean gas connection over the entire circumference using self-tapping screws (M8 x 16 mm).

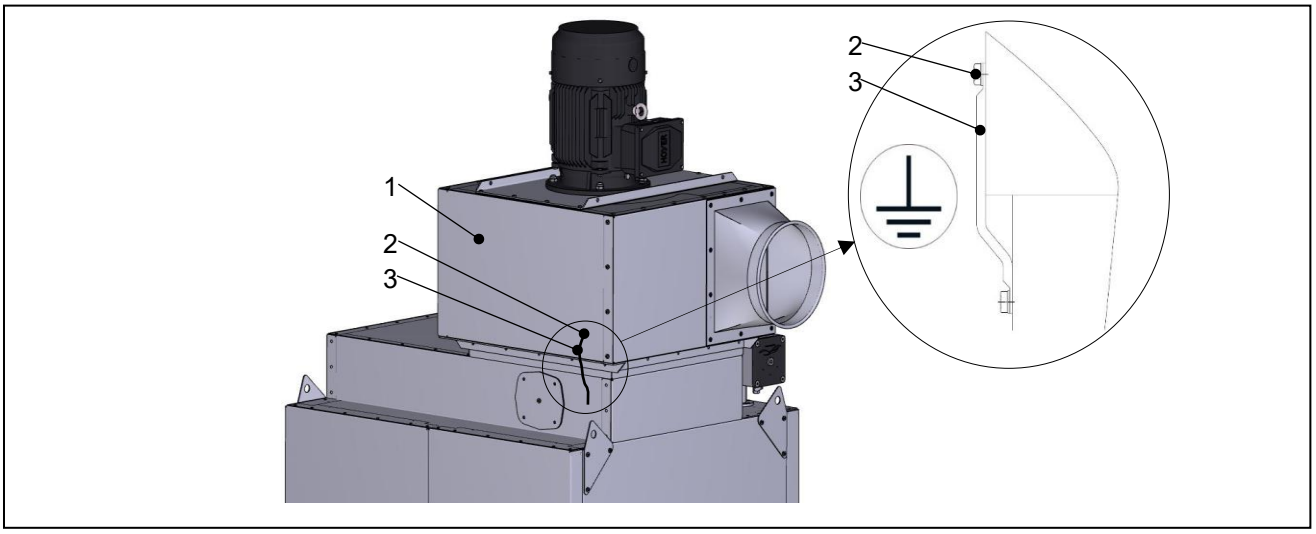

➔ Unscrew and remove the self-tapping screw (2) on the built-in fan (1).*
➔ Fasten the loose earthing cable (3) on the filter housing to the self-tapping screw (2) on the built-in fan (1).*
➔ Tighten all bolts.
➔ Seal the built-in fan (1) on the complete periphery with sealing compound.

* grounding necessary for ATEX Filters

9.4.5 Built-in fan with Dual silencer

NOTICE

The built-in fan (1) and the Dual silencer (2) are supplied together on a pallet. They are not connected.

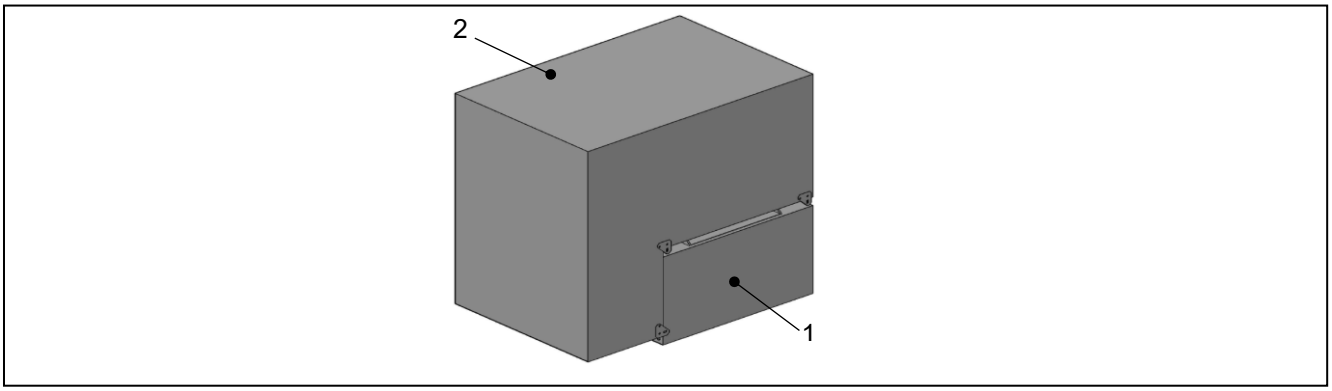

➔ Take the Dual silencer (2) off the built-in fan (1).

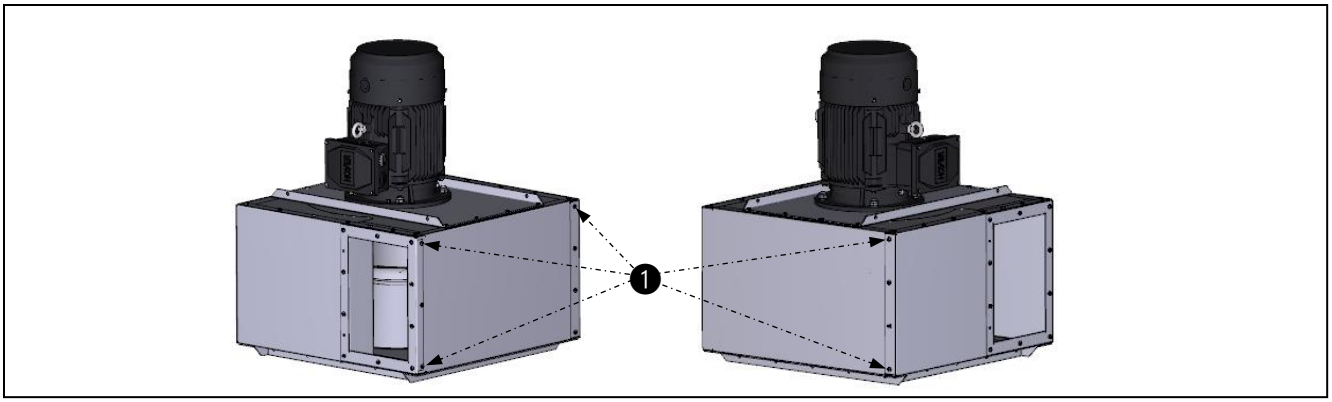

➔ Remove the respective screws (❶) on the built-in fan.

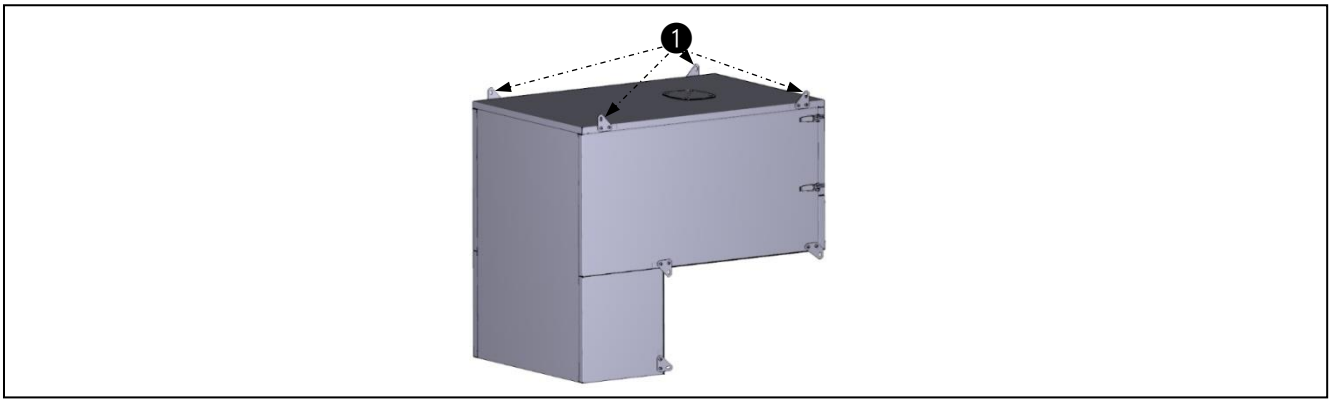

➔ Raise the Dual silencer using the mounted lugs (❶) with the help of a crane.

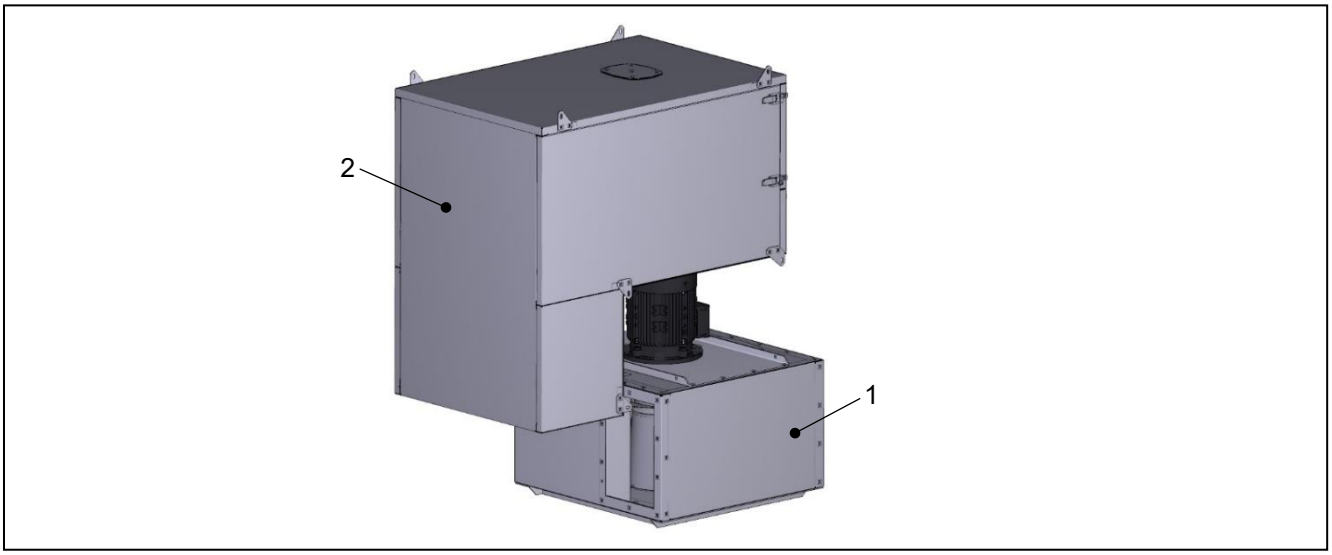

➔ Place the Dual silencer (2) on the built-in fan (1).

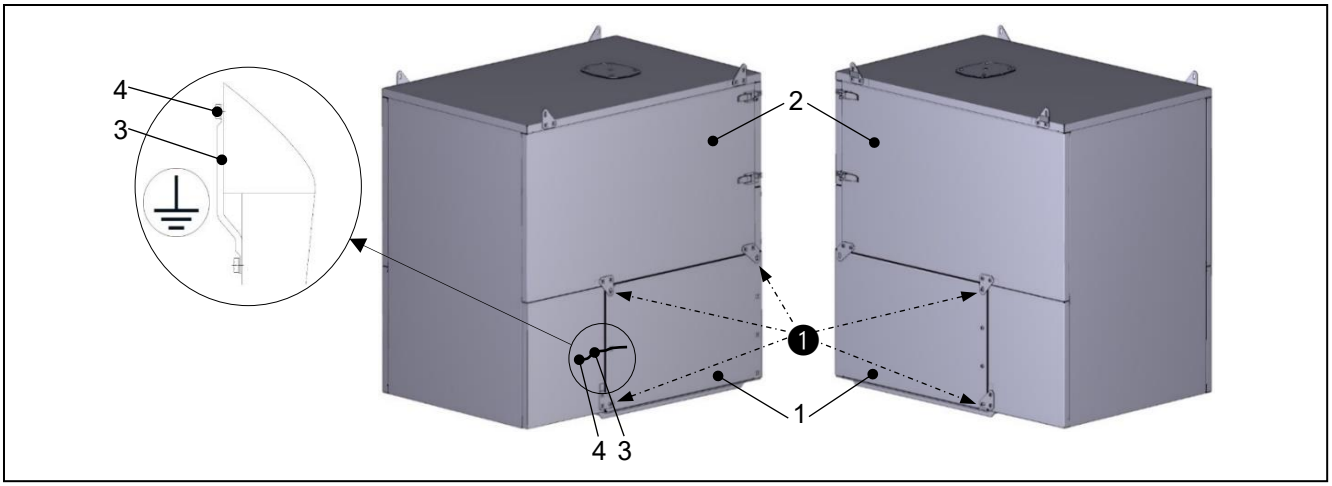

➔ Fasten the Dual silencer (2) at the provided points (❶) on the built-in fan (1) using the removed self-tapping screws.

➔ Unscrew and remove the self-tapping screw (4) on the DUAL sound insulation cabin (2).

➔ Fasten the loose earthing cable (3) on the built-in fan to the self-tapping screw on the DUAL sound insulation cabin (2).*

* grounding necessary for ATEX filters

9.4.6 Clean gas connection piece

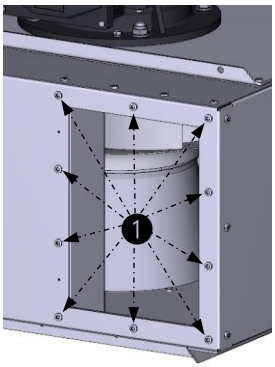

➔ Remove all screws (❶) on the exhaust opening of the built-in fan.

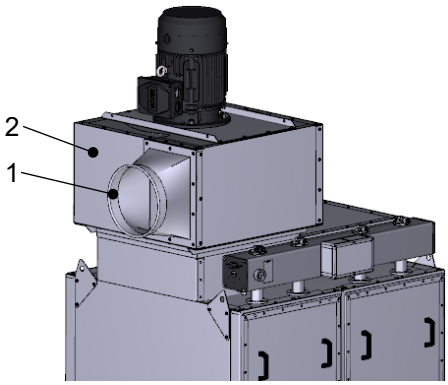

➔ Fasten the connection piece for the clean gas connection (1) to the exhaust opening of the built-in fan (2) using the removed self-tapping screws (M8 x 16 mm).

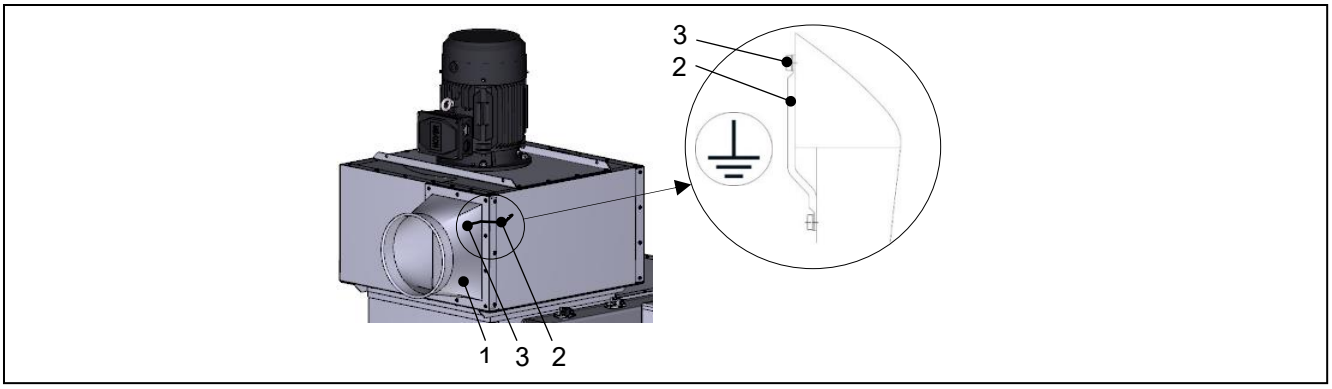

➔ Unscrew and remove the self-tapping screw (3) on the support piece (1).*
➔ Fasten the loose earthing cable (2) on the built-in fan to the self-tapping screw on the support piece (1).*
➔ Tighten all bolts.
➔ Seal the connection piece (1) on the complete periphery with sealing compound.

* grounding necessary for ATEX filters

9.4.7 Dirty gas connection piece

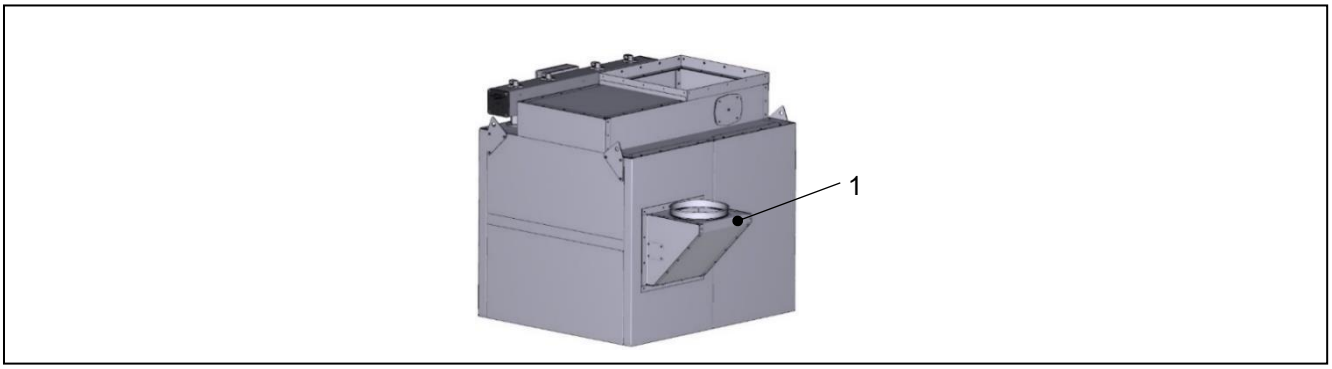

➔ Apply supplied sealing tape to the flange on the connecting piece for dirty gas connection (1).
➔ Fasten the connecting piece for dirty gas connection (1) to the rear panel of the filter using the self-tapping screws (M8 x 16 mm).

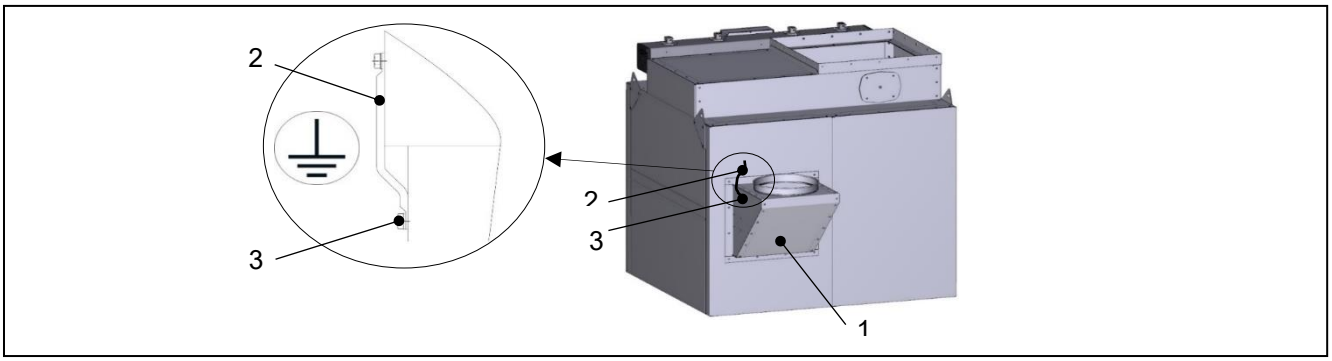

➔ Unscrew and remove the self-tapping screw (3) on the support piece (1).*
➔ Fasten the loose earthing cable (2) on the filter housing using the self-tapping screw (3) on the support piece (1).*
➔ Tighten all bolts.
➔ Seal the connection piece (1) on the complete periphery with sealing compound.

* grounding necessary for ATEX filters

9.4.8 Acoustic hood

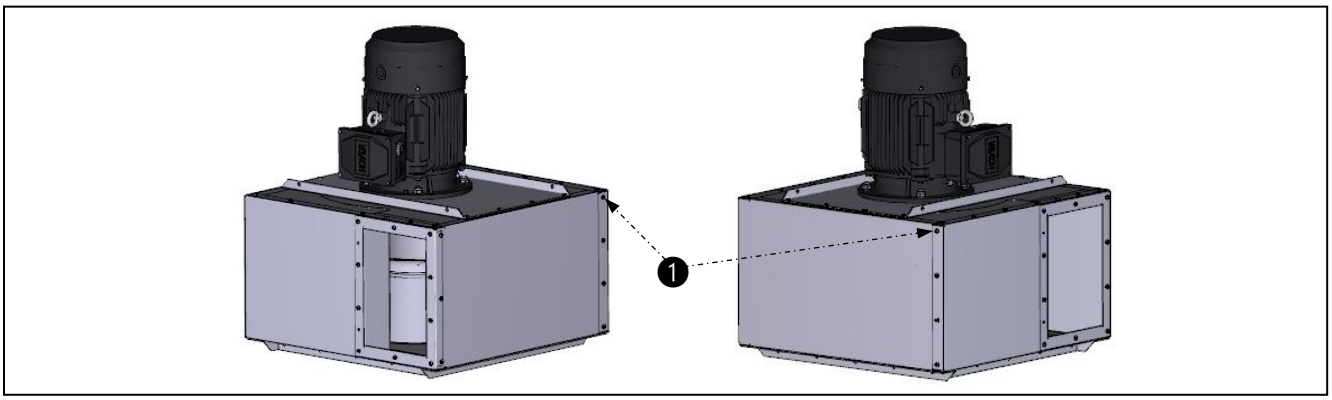

➔ Remove the respective screws (❶) on the built-in fan.

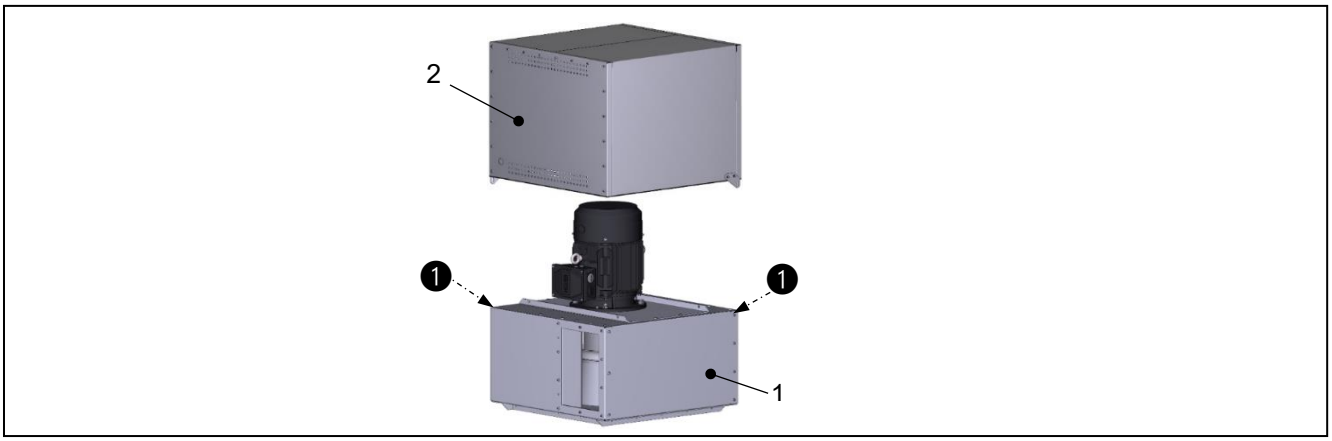

➔ Fasten the acoustic hood onto the built-in fan using the removed, self-tapping screws (❶).

9.4.9 Acoustic hood

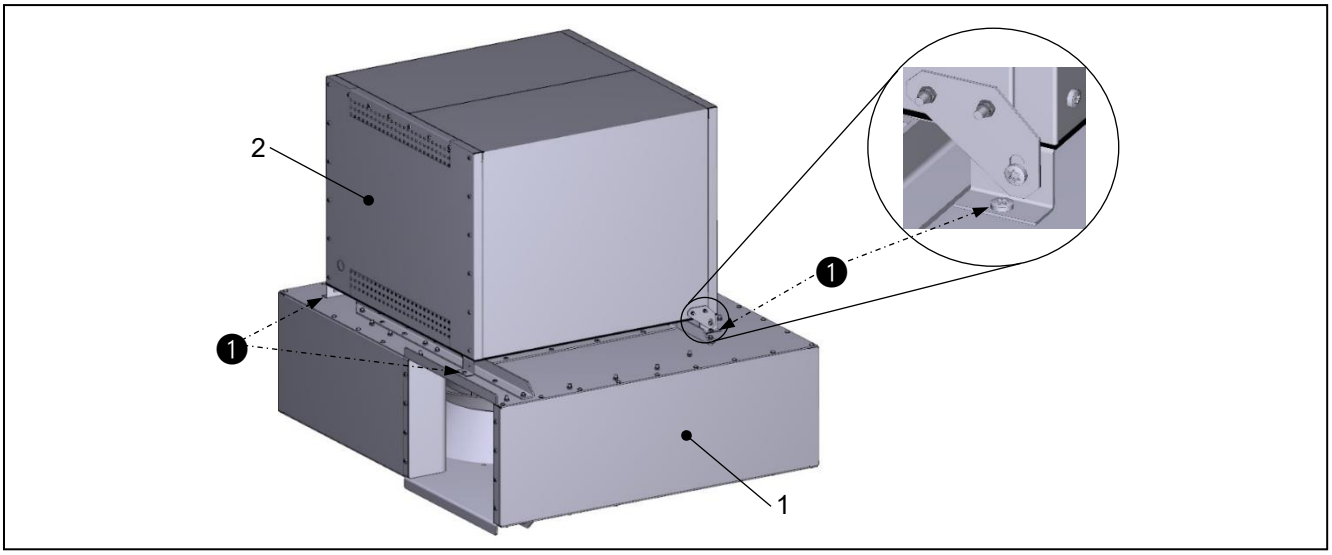

➔ Put silencer (2) over built-in fan (1).

➔ Fasten silencer (2) in place on the built-in fan (1) at the four footplates (❶) using the provided, self-tapping screws (M8 x 16 mm).

9.5 Supply connection points

9.5.1 Compressed air connection

NOTICE

The compressed air connection must be provided with a water / oil separator and a pressure reduction valve. All parts between the compressor and the pressure vessel must have a minimum diameter of ½".

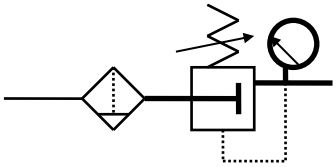

➔ Connect the compressed air supply to the pressure vessel without pressure.

9.5.2 Differential pressure measurement hose connectors

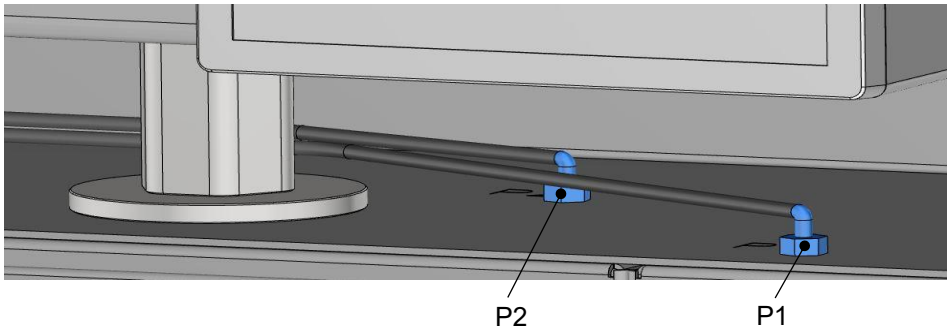

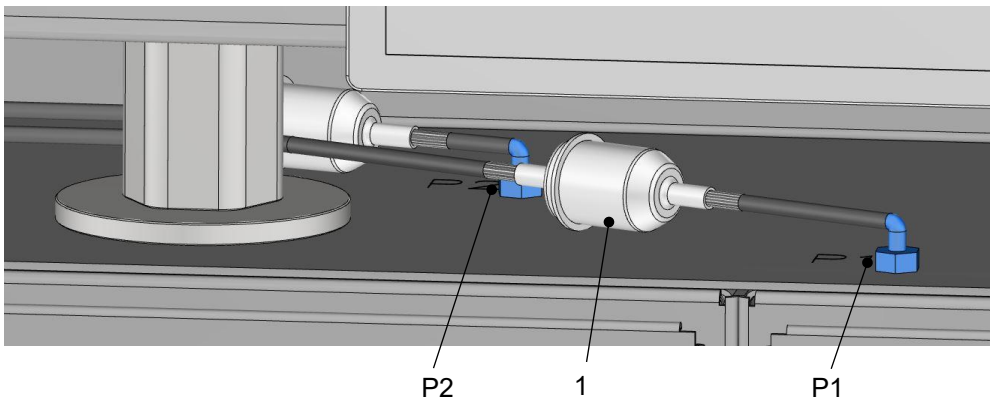

➔ Hoses for measuring the differential pressure must be connected to the respective connection sockets on the control cabinet and the connection angles on the filter (P1 or P2). Air filter (1) (required for ATEX version).

9.5.3 Connection cable: control cabinet – valve box

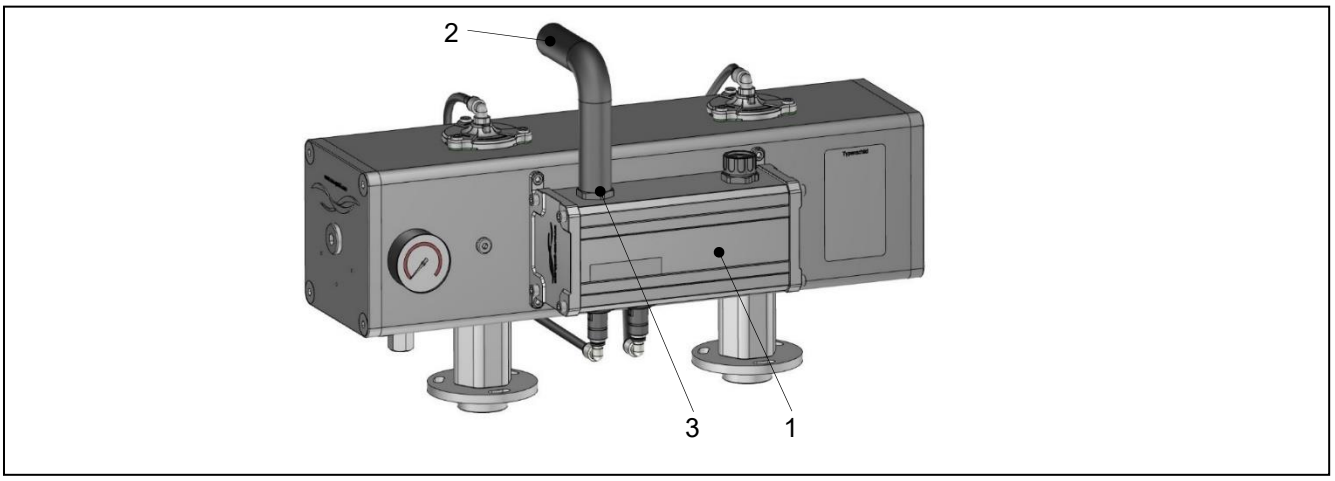

➔ Screw off sealing cap (3) on valve box (1).
➔ Connect connection cable (2) to control cabinet and valve box (1).

9.5.4 Connection cable: valve box – valve box

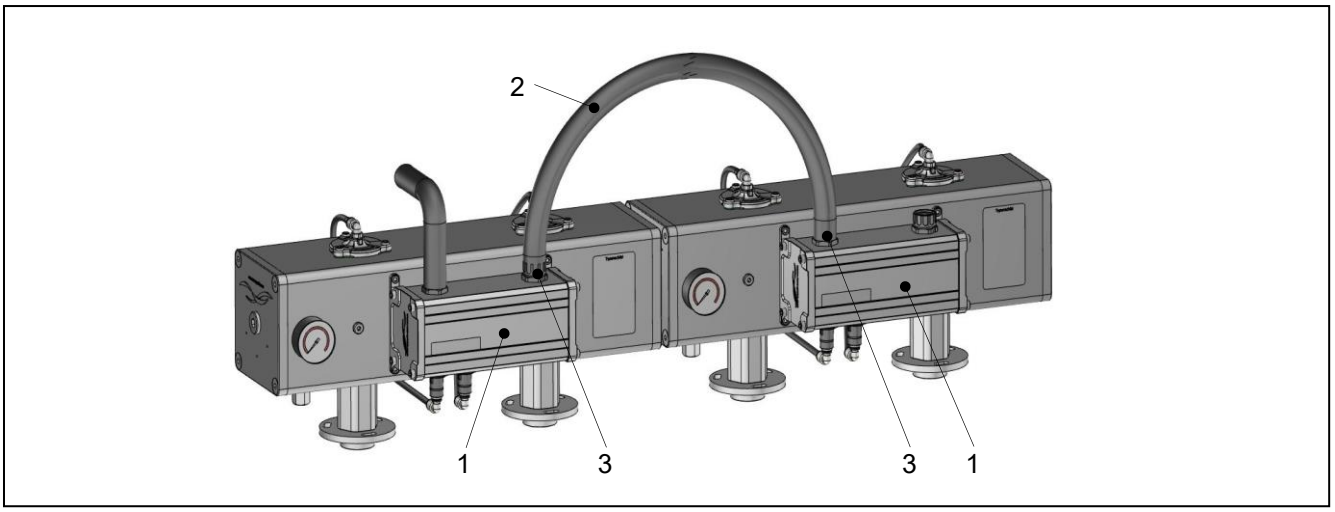

➔ Screw off the corresponding sealing caps (3) on the valve boxes (1).
➔ Connect the connection cable (2) to the two valve boxes (1).

9.5.5 Open cover of the sound insulation hood

CAUTION

Danger of crushing from falling sound insulation hood!

Non-compliance can lead to medium or minor injuries!

➔ Insert the support rods (4) carefully in the respective locking device on the lid.

NOTICE

All supply and connection cables must be fed through the side sealing cap (5) in the sound insulation hood.

NOTICE

For sound insulation hoods with several handles (3), the cover of the sound insulation hood should be opened, secured and closed by two persons.

Opening

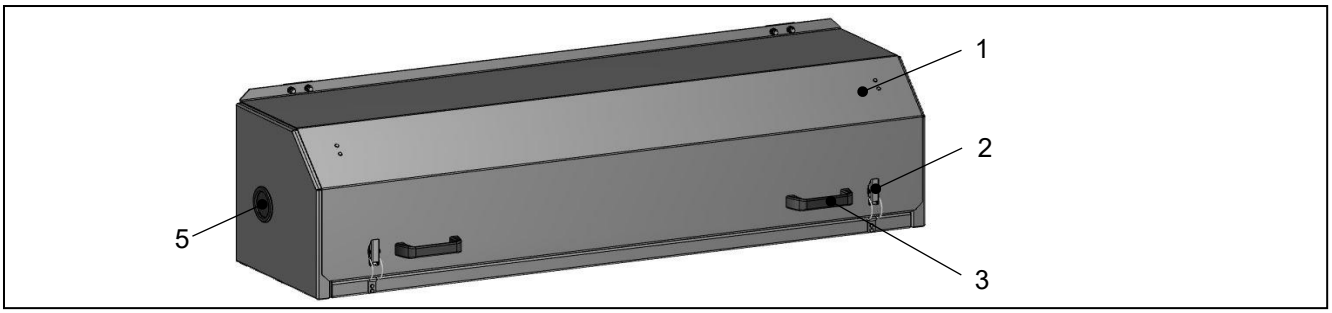

➔ Undo the fastening clips (2).
➔ Raise the cover (1) by the handles (3) and hold tight.

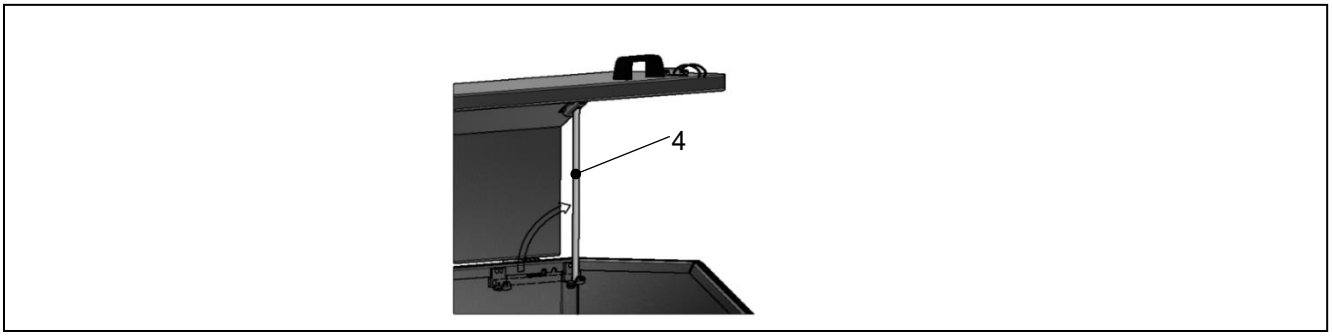

➔ Raise the support rods (4) on each side of the rear wall of the sound insulation hood and insert into the securing elements in the cover.
➔ Make a cross-shaped incision in the sealing cap (5) on the connecting side.
➔ Remove the insulation of the sound insulation hood in the area of the sealing cap (5) from inside.

Closing

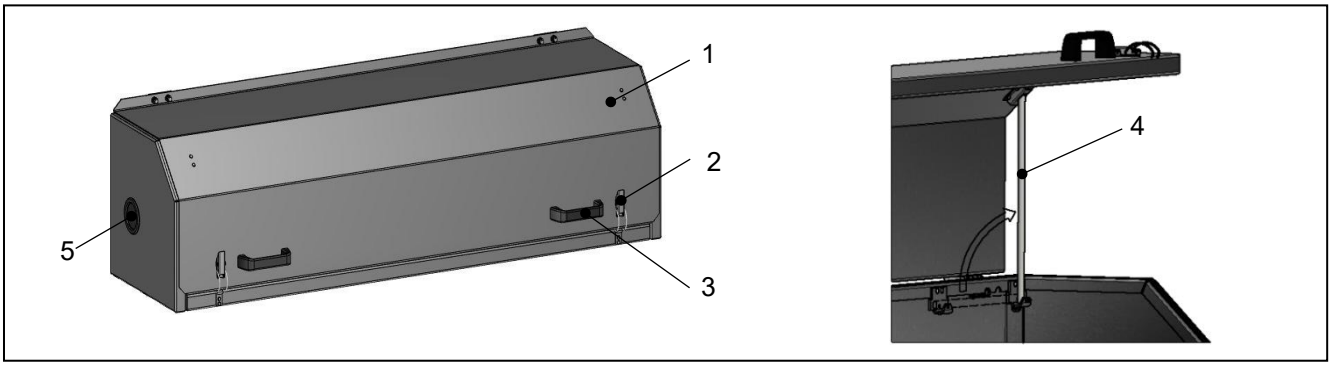

➔ Hold the cover (1) tight by the handles (3).

➔ Remove the support rods (4) from the securing elements in the cover on each side of the sound insulation hood, fold down and insert into the holders in the rear wall.

➔ Close the cover (1) slowly and fasten in place with the fastening clips (2).

9.5.6 Power supply connection

DANGER

Dangerous electrical voltage!

Non-compliance will result in death or serious injury!

➔ Only qualified electricians may work on electrical equipment.

9.5.6.1 Built-in fan

➔ Connect fan electrically with power supply switched off (de-energized).

9.5.6.2 Control cabinet with filter controller

DANGER

Improper installation of the control cabinet or the connected operating equipment!

Non-compliance will result in death or serious injury!

For this reason, the general safety regulations for equipment in industrial electrical plants should be observed and in particular the following points:

➔ Technical personnel may only carry out installation of the control cabinet.

➔ All applicable legislation, requirements, rules and regulations for the installation of electrical operating equipment must be observed with regard to the installation site.

➔ The control cabinet may only be used within the permitted operating range.

➔ Establish power supply.

➔ Connect fan to control cabinet (→ section **“Supplier documentation”** → **“Operation instructions Insight Control Panel”**).

NOTICE

Make sure that the cable glands are screwed tight and completely surround the cables.

➔ Unscrew and remove cable glands which are not in use and replace with a blanking plug.

9.5.7 Burst sensor

NOTICE

The burst sensor of the explosion vent must be mounted (→ instructions of the sub-supplier / → section “Supplier documentation”) and electrically connected after completing the assembly work.

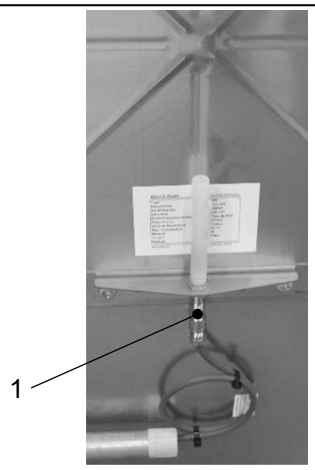

➔ Mount burst sensor and connect to electrical supply.
➔ Remove the protective cap on the burst sensor.

9.6 Earthing of the machine/plant

NOTICE

Electrically conductive connection of the machine / plant to earthing potential must be established.

The earthing of the machine / plant must be carried out by a specialist company.

Upon completion of assembly work, the complete machine/plant must be earthed to the foundation or the steel construction.

The earthing must be carried out in accordance with the currently valid national guidelines for the discharge of static electricity.

10 Initial commissioning

10.1 Preparatory activities

DANGER

Dangerous electrical voltage!

Non-compliance will result in death or serious injury!

➔ Only qualified electricians may work on electrical equipment.

NOTICE

Any errors found must be remedied before proceeding with the commissioning.

For the operating pressure and quality of the compressed air (→ section "Operating pressure and compressed air quality").

If the power consumption is too high, switch the machine / plant off immediately and contact our service department.

The instructions in the operating manuals of the supplier (→ section "Supplier documentation") must be read and observed prior to starting up for the first time.

➔ Check filter and duct system for leaks.
➔ Check all electrical connections for correct design.
➔ Switch electrical power supply on.
➔ Check clockwise rotating field of electrical power supply.
➔ Start compressor and / or open compressed air supply.
➔ Check pressure in pressure tank (pressure gauge display).
➔ Select language on the filter controller (→ section **"Supplier documentation"** → **"Operation instructions Insight Control Panel"**).
➔ Start test operation (→ section **"Supplier documentation"** → **"Operation instructions Insight Control Panel"**).
➔ Check filter cleaning.
➔ Check fan's power consumption.
➔ Check earthing.

NOTICE

Before starting the first start-up, the machine / device must be completely assembled, closed, sealed and included in the operation process as intended.

10.2 Commissioning

➔ Switch machine / plant on (→ section **"Supplier documentation"** → **"Operation instructions Insight Control Panel"**).

11 Operation

NOTICE

Before commissioning the machine / plant, it is necessary to follow the comments in section “Fundamental safety instructions”!

A trained expert may only execute the commissioning of the machine / plant!

NOTICE

The settings may only be changed or cancelled during the guarantee period with our prior consent.

11.1 Plant start-up

NOTICE

Before switching on the machine / plant is to ensure that, the compressed air supply is ensured and the operating pressure in the pressure vessel (→ section “Operating pressure and compressed air quality”) is reached.

➔ Check whether the main switch on the control cabinet has been switched on; if necessary, switch on.

➔ Unlock button **“EMERGENCY STOP”**.

➔ Activate machine / plant ready for operation (→ section **“Supplier documentation”** → **“Operation instructions Insight Control Panel”**)

The ready-to-operate filter cleaning system is enabled.

11.2 Plant shutdown

NOTICE

Press “EMERGENCY STOP” button in real emergencies.

When operation of the upstream plant components ends and prior to prolonged stoppages (e.g. for inspections), the entire plant must remain in operation for a further period of roughly 15 - 30 minutes so that the cake of dust adhering to the filter material can be removed and the dust collection hopper and all subsequent dust discharge devices can be emptied completely.

This prevents the cake of dust adhering to the filter material during operation falling off abruptly on account of the sudden pressure drop and clogging the dust discharge devices.

NOTICE

Any and all subsequent on-site plant components for transporting or storing the dust must also be in operation during this time.

➔ Then switch off the machine / plant (→ section **“Supplier documentation”** → **“Operation instructions Insight Control Panel”**).

NOTICE

Switch off the main switch during prolonged standstill periods or repair work and secure it with a padlock.

Further criteria for a shutdown of the machine / plant in case of malfunction may be part of the following section.

12 Troubleshooting

12.1 Safety instructions



WARNING

Rotating or moving parts!

Non-compliance can lead to death or serious injury!

Prior to maintenance and repair work:

- ➔ Disconnect machine / plant from electrical power supply, i.e. disconnect all energy sources using the main switch on the control cabinet (main switch to position **“0”**).
- ➔ Attach a warning sign to main switch that prohibits any operation.
- ➔ Secure main switch with a padlock and remove key.
- ➔ Check that the machine / plant is voltage-free.
- ➔ Depressurize compressed air supply and vent (empty) pressure vessel.

Upon completion of maintenance and repair work:

- ➔ Ensure that all safety devices have been put back into place and are functioning.



NOTICE

Fundamental safety instructions (→ section “Fundamental safety instructions”) and the corresponding maintenance regulations (→section “Maintenance”) must be observed for repair and maintenance work!

The operating manuals of the suppliers must be read and observed without fail prior to carrying out repair and maintenance work!

Local safety regulations apply under all circumstances for operation of the machine / plant irrespective of the safety instructions contained in this manual!

12.2 Troubleshooting with the power supply switched on



WARNING

Rotating or moving parts!

Non-compliance can lead to death or serious injury!

As troubleshooting is extremely dangerous when the power supply is switched on, this method should only be chosen if it is absolutely necessary. Under all circumstances, it may only be carried out by specially trained and qualified personnel.

In case of malfunction of the machine / plant demanding electrical measurements (e.g. current, tension) or verification of the function of motorized parts, a fault finding with connected electrical energy sources might be necessary.

In order to minimize the risks involved with such a procedure, at least the following fundamental safety measures must be gradually taken:

- ➔ Call in additional staff whose task it is to activate one of the emergency-off buttons as soon as there is any danger.
- ➔ Put up signs with the warning **“NO ACCESS - REPAIR/MAINTENANCE WORK WHILE PLANT RUNNING”**.
- ➔ Disconnect and isolate the machine / plant from the power supply (→ section **“Safety instructions”**).
- ➔ Remove as few protective facilities as necessary.
- ➔ Before you switch the machine / plant on again, make sure that nobody is in the danger zone.
- ➔ Switch the machine / plant on again and make the necessary observations at a safe distance from all moving and live components.
- ➔ Switch the machine / plant off again.
- ➔ Disconnect and isolate the machine / plant from the power supply (→ section **“Safety instructions”**).
- ➔ Carry out the necessary repairs and install all safety and protective facilities again.
- ➔ Check the machine / plant and the safety system for function ability. We would point out once again that the machine / plant may only be operated with all the safety system components in working order.

12.3 Checklists in event of faults



NOTICE

Any faults, which occur during operation, can be localized and remedied using the following table.

The operating manuals of the suppliers must also be observed without fail!

In the case of all the items marked with * there is an obligation to us during the guarantee period before the repairs are carried out!

12.3.1 Filter

	Fault	Possible causes	Action
1	Filter resistance too high	• Filter not cleaned frequently enough	➔ Check the parameter settings and restore the factory setting if necessary (→ section **"Supplier documentation"** → **"Operation instructions Insight Control Panel"**) ➔ Use the **"Test operation"** (→section **"Supplier documentation"** → **"Operation instructions Insight Control Panel"**) function to acoustically check correct functioning of the filter cleaning valves
		• Jet of compressed air too low	➔ Check compressed air supply ➔ Check operating pressure in the pressure vessel (min. 6 bar / max. 7 bar) ➔ De-aerate the compressed air system ➔ Check the pilot voltage on the electrical control ➔ Replace the valve diaphragm
		• Down-time-cleaning is not performed at the turn-off of the filter	➔ Check that the electrical connection is correct so that the down-time-cleaning normal stop is commenced
		• Too large amount of material supplied in too short time	➔ Lower the material supply per time unit or increase plant capacity
		• Filter elements are saturated with dust	➔ Clean filter elements and, if necessary, replace
2	Separated dust accumulates in dust collection hopper	• Wet dust sticks to the walls	➔ Ensure that dryer dust is supplied
		• Dust bin[1] full	➔ Check filling level and empty the dust bin if necessary
		• Single flap valve[1] defective	➔ Check single flap valve and repair if necessary
		• Rotary valve[1] defective	➔ Check rotary valve and repair if necessary (→ section **"Supplier documentation"**)
		• Connection hose[1] for venting the dust collector not connected	➔ Remount the connection hose on the vent connection
3	Dust exit at the filter doors	• Door is not closed correctly	➔ Close door correctly
		• Filter doors leaking	➔ Replace seals
4	Dust in cleaned gas	• Defective filter element	➔ Replace defective filter element
		• Filter element is not mounted correctly	➔ Mount the filter element correctly
		• Unsuitable filter material used	➔ Contact our customer service
		• Defective seal mounting plate	➔ Replace defective seal
5	Dust emerges from the pipe connections during the after-cleaning process	• Missing shut-off damper in the dirty gas duct	➔ Mount a shut-off damper in the dirty gas duct
		• Leaking shut-off damper	➔ Check shut-off damper shuts tight
6	Performance too low	• Deposits in the dirty gas duct work	➔ Clean dirty gas duct work

[1] optional equipment

	Fault	Possible causes	Action
7	Explosion	• Explosion	➔ Establish the causes for the explosion and rectify ➔ Check filter's operational readiness ➔ Check pressure relief devices in accordance with the suppliers' instructions (→ section **"Supplier documentation"**), repair or exchange ➔ Install new burst sensor

12.3.2 Explosion vent

	Fault	Possible causes	Action
1	Explosion vents leaks	• Sealing defective	➔ Replace explosion vents
		• Explosion vents destroyed	➔ Replace explosion vents

12.3.3 Pressure release valve

	Fault	Possible causes	Action
1	Pressure release valve leaks during normal use	• Pressure too high during after cleaning	➔ Reduce operating pressure ➔ Prior to down-time cleaning, open any existing shut-off dampers in the clean gas duct
		• Sealing defective	➔ Check the pressure release valve in accordance with the suppliers' instructions (→ section **"Supplier documentation"**) and repair if necessary

12.3.4 Electric drives



DANGER

Dangerous electrical voltage!

Non-compliance will result in death or serious injury!

➔ Only qualified electricians may work on electrical equipment.

	Fault	Possible causes	Action
1	Motor does not run	• Interruption in supply line	➔ Check terminals ➔ Check or measure line
		• Fault in switching unit	➔ Replace switching unit
		• Terminal voltage too low	➔ Measure terminal voltage
		• Winding has body contact	➔ Check with hand-driven generator or sufficiently high voltage
		• Bearing defective	➔ Replace bearing
		• PTC thermistor has been triggered	➔ Wait until motor has cooled down
		• Winding damage	➔ Have motor repaired by qualified staff
		• Fault in converter	➔ Observe fault messages*
2	Motor starts sluggishly and speed too low under load	• Machine or main voltage too low	➔ Measure voltage
		• Short circuit in coil	➔ Eliminate shot circuit or install new winding
		• Winding has body contact	➔ Check with hand-driven generator or adequately high voltage
3	3-phase AC motor hums at standstill, not when running	• Body contact in the rotor winding	➔ Establish defective winding section and repair
		• Wrong connection of phases	➔ Check phases
		• Rotor grazes	➔ Have motor repaired by qualified staff
4	3-phase AC motor becomes too warm in continuous operation	• Winding short circuit in the stator	➔ Have checked and rewound by qualified staff
5	Safety fuses burn out or motor protection plate triggers at once	• Short circuit in wire or motor	➔ Eliminate short circuit
		• Motor has body or motor contact	➔ Have motor repaired by qualified staff
		• Motor is wrongly wired	➔ Correct wiring

	Fault	Possible causes	Action
6	3-phase AC motor becomes too warm in continuous operation	• Load too high	➔ Measure power input*
		• Voltage too high or too low	➔ Check main voltage and voltage drop up to electric drive*
		• Single-phase instead of 3-phase operation	➔ Check power input of all three lines*
		• Short circuit in coil	➔ Check supply line for interruption and, if necessary, eliminate or have rewound
		• Ventilation impaired	➔ Remove dust, chips or the like from air paths ➔ Re-adjust air deflectors ➔ Prevent intake of warm exhaust air
		• Rotor grinds in stator	➔ Adjust or replace bearings
		• Foreign matter in air gap	➔ Dismantle rotor and clean motor
7	Jerky start	• Short circuit in the rotor winding	➔ Eliminate short circuit or have rewound
		• Connection to PEN conductor instead of to outer conductor	➔ Check connections and, if necessary, correct
8	Power input fluctuating with double slip frequency	• Interruption in winding or asymmetry of resistances in rotor or defective short-circuiter	➔ Measure resistances ➔ Have motor repaired by qualified staff
9	3-phase AC motor runs too slowly or not at all in star delta connection high	• Load too high	➔ Relieve load of fan*
		• Terminal voltage too high	➔ Check main voltage on activation
10	Wrong direction of rotation	• Motor disconnected	➔ Two phases interchanged
11	3-phase AC motor shows excessive no load current	• Terminal voltage too high	➔ Measure main voltage*
		• Air gap possibly increased during repairs	➔ Measure air gap at three points and, if necessary, set correctly

13 Maintenance and repair

13.1 Maintenance

NOTICE

The operating manuals of the suppliers and the corresponding details on rating and maintenance plates must be observed and followed without fail before starting any maintenance work on the supplier's parts!

NOTICE

If carrying out any maintenance or repair work on the machine / plant, attention must be paid that explosive atmospheres (if possible) or any other source of ignition are avoided.

NOTICE

Only original spare parts may be used.

This section is not a reference manual for comprehensive repairs.

Our after-sales service will be very pleased to provide you with further advice.

NOTICE

Dirt must regularly be removed (depending on the degree of fouling) from the surface of plant parts and from the plant area. Dust and moisture promote corrosion.

The contractually agreed warranty does not relieve the owner of the machine/plant of the need and obligation to conduct regular preventive maintenance from the date of commissioning onwards.

Malfunctions due to insufficient or incorrect maintenance will give rise to high costs and long downtimes during which the machine/plant is not operational.

This chapter only describes the work to be undertaken within the framework of normal maintenance or when replacing worn parts.

The maintenance work is described in sufficient detail to be carried out by trained personnel, familiar with such maintenance work.

The following checklists for maintenance have been drawn up for normal operation of the machine/plant. The recommended intervals are merely guideline values; they refer to the time after commissioning and are stated in operating hours. Depending on actual operating conditions, the intervals required for maintenance may differ from those recommended. You should therefore define your own maintenance requirements.

In order to avoid extended downtimes, we recommend that the most important wear and spare parts be kept in stock at all times.

13.2 Repair

NOTICE

The drawings in the following instructions have been simplified in part in their graphic representation.

The operator's service personnel may only carry out the maintenance/repair work described in this section.

Work is described in this section which may occur as part of normal maintenance/repair or when replacing parts subject to wear and tear.

Please contact our Service Department in the event of any major maintenance/repair work.

13.3 Safety instructions

DANGER

Dangerous electrical voltage!

Non-compliance will result in death or serious injury!

➔ Only qualified electricians may work on electrical equipment.

DANGER

Voltage-carrying parts!

Non-compliance will result in death or serious injury!

Connecting terminals of the main switch are still live when the mains switch on the control cabinet has been set to **"0"** position.

➔ Observe markings on connecting terminals.

WARNING

Rotating or moving parts!

Non-compliance can lead to death or serious injury!

Prior to maintenance and repair work:

➔ Disconnect machine / plant from electrical power supply, i.e. disconnect all energy sources using the main switch on the control cabinet (main switch to position **"0"**).
➔ Attach a warning sign to main switch that prohibits any operation.
➔ Secure main switch with a padlock and remove key.
➔ Check that the machine / plant is voltage-free.
➔ Depressurize compressed air supply and vent (empty) pressure vessel.

Upon completion of maintenance and repair work:

➔ Ensure that all safety devices have been put back into place and are functioning.



WARNING

Danger of falling!

Non-compliance can lead to death or serious injury!

If working above head height:

➔ Use tested and approved climbing aids and work platforms.
➔ Do **not** use machine parts as climbing aids.



CAUTION

Escaping compressed air!

Non-compliance can lead to medium or minor injuries!

➔ Trained technical personnel can only carry out work on pneumatic equipment.

Prior to maintenance and repair work:

➔ Depressurize compressed air supply and vent (empty) pressure vessel.

ATTENTION

Flying sparks and heat can cause fires when carrying out welding, cutting and grinding work!

Non-compliance can lead to property damage!

➔ Always switch off machine / plant.
➔ Keep flammable materials at a safe distance.
➔ Have fire extinguishers available.
➔ Observe general fire prevention regulations.

ATTENTION

Dirt and rust!

Non-compliance can lead to property damage!

If parts of the machine / plant are being dismantled:

➔ Cover openings, bearings, connections etc. in a suitable manner to prevent any dirt penetration.
➔ In the event of longer stoppages, protect all dismantled parts against dirt, rust and damage.

ATTENTION

Improper bolt / screw connections!

Non-compliance can lead to property damage!

➔ Bolts / screws that are no longer suitable for use are to be replaced with bolts / screws of the same quality (strength, material) and design.

➔ Tighten screw connections that have been loosened.

NOTICE

Fundamental safety instructions (➔ section "Fundamental safety instructions") must be observed for repair and maintenance work!

The operating manuals of the suppliers must be read and observed without fail prior to carrying out repair and maintenance work!

Local safety regulations apply under all circumstances for operation of the machine / plant irrespective of the safety instructions contained in this manual!

NOTICE

Visual inspections, e.g. to identify leaks or external damage, and re-lubrication can be undertaken during the machine / plant is in operation.

Wear personal safety equipment when carrying out maintenance work.

The safety of personnel carrying out work has priority at all times during maintenance work.

The full extent of work involved must be known prior to commencing maintenance work to enable exact planning of procedures. Make sure that only one person has overall responsibility at all times.

Ensure that these documents have been read and understood by everyone entrusted with maintenance work.

13.4 Safety instructions – explosive atmosphere



DANGER

Explosive atmosphere!

Non-compliance will result in death or serious injury!

Prior to carrying out control or maintenance work on pressure relief elements:

- ➔ Disconnect machine / plant from electrical power supply, i.e. disconnect all energy sources using the main switch on the control cabinet (main switch to position **“0”**).
- ➔ Attach a warning sign to main switch that prohibits any operation.
- ➔ Secure main switch with a padlock and remove key.
- ➔ Check that the machine / plant is voltage-free.
- ➔ Empty the entire dust collection and transport system completely.

In the case of winter conditions (snow, frost), make sure without fail that the pressure relief elements are free of ice and snow.



DANGER

Dangerous electrical voltage!

Non-compliance will result in death or serious injury!

- ➔ Only qualified electricians may work on electrical equipment.



DANGER

Voltage-carrying parts!

Non-compliance will result in death or serious injury!

Connecting terminals of the main switch are still live when the mains switch on the control cabinet has been set to **“0”** position.

- ➔ Observe markings on connecting terminals.



WARNING

Rotating or moving parts!

Non-compliance can lead to death or serious injury!

Prior to maintenance and repair work:

- ➔ Disconnect machine / plant from electrical power supply, i.e. disconnect all energy sources using the main switch on the control cabinet (main switch to position **“0”**).
- ➔ Attach a warning sign to main switch that prohibits any operation.
- ➔ Secure main switch with a padlock and remove key.
- ➔ Check that the machine / plant is voltage-free.
- ➔ Depressurize compressed air supply and vent (empty) pressure vessel.

Upon completion of maintenance and repair work:

- ➔ Ensure that all safety devices have been put back into place and are functioning.

WARNING

Danger of falling!

Non-compliance can lead to death or serious injury!

If working above head height:

➔ Use tested and approved climbing aids and work platforms.
➔ Do **not** use machine parts as climbing aids.

CAUTION

Escaping compressed air!

Non-compliance can lead to medium or minor injuries!

➔ Trained technical personnel can only carry out work on pneumatic equipment.

Prior to maintenance and repair work:

➔ Depressurize compressed air supply and vent (empty) pressure vessel.

ATTENTION

Flying sparks and heat can cause fires when carrying out welding, cutting and grinding work!

Non-compliance can lead to property damage!

➔ Always switch off machine / plant.
➔ Keep flammable materials at a safe distance.
➔ Have fire extinguishers available.
➔ Observe general fire prevention regulations.

ATTENTION

Dirt and rust!

Non-compliance can lead to property damage!

If parts of the machine / plant are being dismantled:

➔ Cover openings, bearings, connections etc. in a suitable manner to prevent any dirt penetration.
➔ In the event of longer stoppages, protect all dismantled parts against dirt, rust and damage.

ATTENTION

Improper bolt / screw connections!

Non-compliance can lead to property damage!

➔ Bolts / screws that are no longer suitable for use are to be replaced with bolts / screws of the same quality (strength, material) and design.
➔ Tighten screw connections that have been loosened.

NOTICE

Fundamental safety instructions (→ section “Fundamental safety instructions”) must be observed for repair and maintenance work!

The operating manuals of the suppliers must be read and observed without fail prior to carrying out repair and maintenance work!

Local safety regulations apply under all circumstances for operation of the machine / plant irrespective of the safety instructions contained in this manual!

NOTICE

Visual inspections, e.g. to identify leaks or external damage, and re-lubrication can be undertaken during the machine / plant is in operation.

Wear personal safety equipment when carrying out maintenance work.

The safety of personnel carrying out work has priority at all times during maintenance work.

The full extent of work involved must be known prior to commencing maintenance work to enable exact planning of procedures. Make sure that only one person has overall responsibility at all times.

Ensure that these documents have been read and understood by everyone entrusted with maintenance work.

13.5 Checklists for maintenance

13.5.1 Filter

Interval Control point / Maintenance notes

Daily

- Dust bin
  - ➔ Check fill level
  - ➔ If necessary, empty dust bin (→ section **“Repair”**)

Every 720 duty hours or monthly

- Pressure vessel
  - ➔ Check operating pressure (min. 6 bar / max. 7 bar)
  - ➔ Adjust operating pressure if necessary
- Filter housing
  - ➔ Check for dust discharge
  - ➔ If necessary, seal filter housing or exchange damaged parts

Every 4320 duty hours or every 6 months

- Electrical connection for discharge static electricity
  - ➔ Check for corrosion
  - ➔ If necessary, re-establish electrical connections
- Filter housing
  - ➔ Check for tightness, deposits and wear
  - ➔ If necessary, seal filter housing or exchange damaged parts
  - ➔ If necessary, remove any deposits
  - ➔ Check for corrosion
- Filter elements
  - ➔ Check for tightness, deposits and wear
  - ➔ If necessary, exchange damaged filter elements (→ section **“Repair”**)
  - ➔ If necessary, remove any deposits
- Inspection door
  - ➔ Check for tightness
  - ➔ If necessary, replace seals
- Flange connections
  - ➔ Check for tightness
  - ➔ If necessary, replace seals
- Dust bin
  - ➔ Check for tightness
  - ➔ If necessary, replace seal in bracket
- Hose connections
  - ➔ Check for wear and tightness
  - ➔ If necessary, replace hose connections

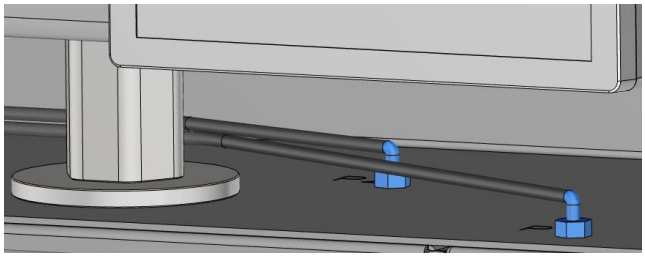

Every 17500 duty hours or every 2 years

- Air filter (1) for hose connections
  ➔ Replace air filter

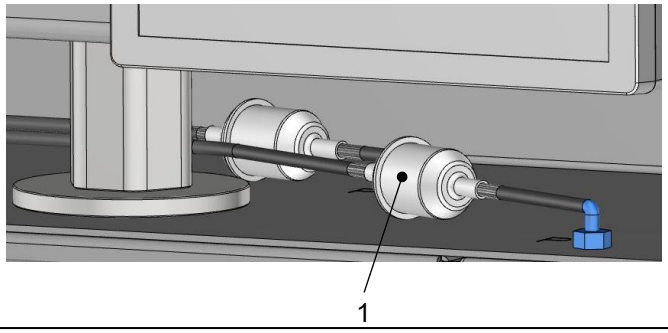

13.5.2 Filter controller

Interval Control point / Maintenance notes

Daily

- Controller
  ➔ Check for fault indication

Every 720 duty hours or monthly

- Cleaning
  ➔ Use the **"Test operation"** (→ section **"Supplier documentation"** → **"Operation instructions Insight Control Panel"**) function to acoustically check correct functioning of the filter cleaning valves.
  ➔ Check if down-time-cleaning is activated (→ section **"Supplier documentation"** → **"Operation instructions Insight Control Panel"**).

13.5.3 Explosion vent

Interval Control point / Maintenance notes

Every 720 duty hours or monthly

- Explosion vent
  ➔ Check for tightness, deposits and damages
  ➔ Remove any deposits
  ➔ In the case of leaks or damage: Exchange explosion relief panel

13.5.4 FM fan routine inspection

Fm fan maintenance intervals:

No.	Inspection / maintenance activity	1 month / 720 h	6 months / 4320 h	1 year	20,000 h
1	Check the motor housing temperature during operation	X	X	X	X
2	Assess the condition of the motor bearings (noise, temperature)	X	X	X	X
3	Remove accumulated dust from the impeller	X	X	X	X
4	Remove dust from the fan housing and motor	X	X	X	X
5	Inspect the impeller blades for wear and corrosion	X	X	X	X
6	Check the impeller position relative to the inlet cone (minimum clearance: 3 mm)	X	X	X	X
7	Inspect electrical cables and terminals		X	X	X
8	Perform a detailed inspection of the impeller for cracks, deformation and loss of material thickness			X	X
9	Diagnose the bearings and determine whether replacement is required				X

Additional requirements for ATEX versions
The following shall be confirmed during each inspection:

ATEX inspection
Check for signs of contact between rotating and stationary components
Check for dust accumulation inside the housing and on the impeller
Check the impeller for cracks, deformation or wear
Check the impeller position relative to the inlet cone (minimum clearance: 4 mm)

13.6 Filter

13.6.1 Replace filter cartridge

CAUTION

Dust-laden air!

Non-compliance can lead to medium or minor injuries!
Following personal protection equipment is to be worn:

- ➔ Protective goggles
- ➔ Dust protection mask
- ➔ Safety gloves

NOTICE

Make sure that no dust escapes into the environment.

Disposal must be carried out according to current national legislation.

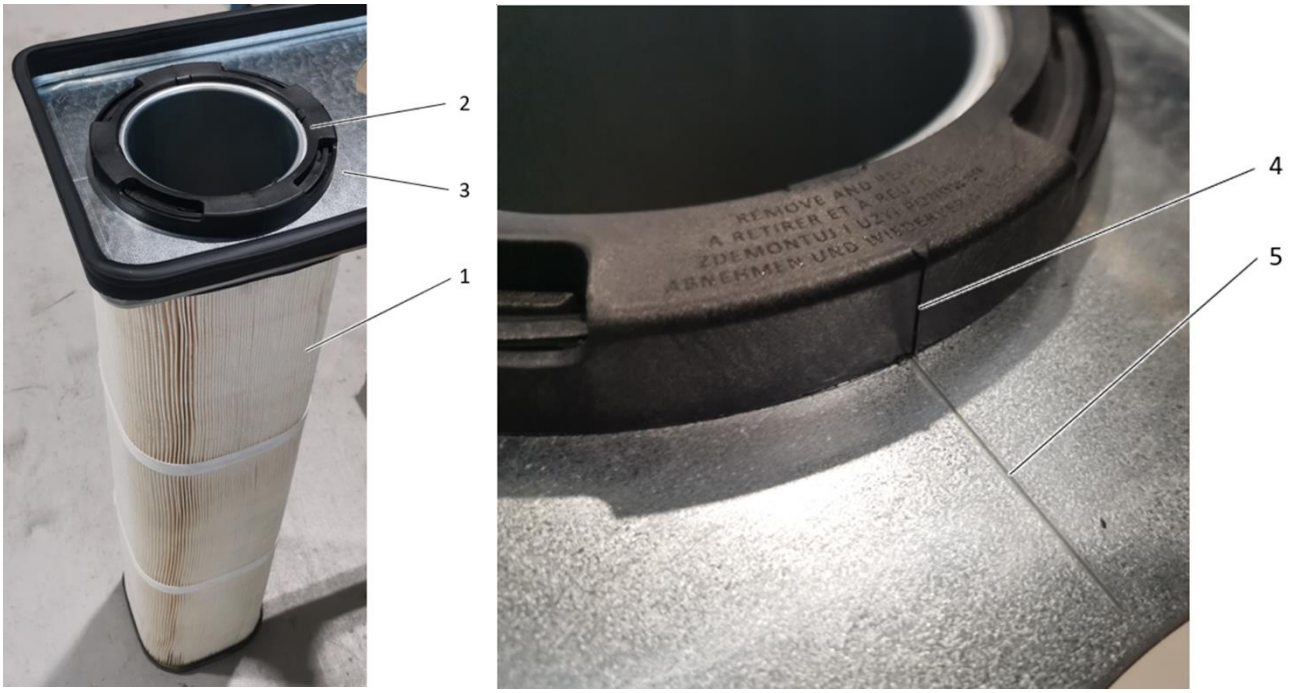

Disassembly

- ➔ Switch off machine / plant and disconnect electrical power (→ section **“Safety instructions”**)
- ➔ Unscrew inspection door and remove or undo locking screws and open inspection door.
- ➔ Press the locking lever up until it stops.
- ➔ Pull out the filter module.
- ➔ On the filter cartridge (1) to be changed, turn the locking ring (2) anti-clockwise by hand by about 45° (↺ → 🔓).
- ➔ Pull the locking ring with UniClean (2) out of the filter cartridge (1).
- ➔ Pull the filter cartridge (1) downwards out of the assembly plate (3).

Assembly

- ➔ Insert the new filter cartridge (1) from above in the assembly plate (3).

NOTICE

Before inserting the locking ring with UniClean (2) in the filter cartridge (1), make sure that the filter cartridge (1) is pushed fully to the left in the openings in the assembly plate (3), otherwise it will not be possible to lock the locking ring correctly (2).

- ➔ Push the locking ring with UniClean (2) into the filter cartridge (1).

NOTICE

Attention must be paid to the following:

- **In a closed state (🔒), the locking ring (2) must be locked into place in the holder on the filter cartridge (1).**
- **In a closed state (🔒), the vertical markings (4) on the locking ring (2) must be in line with the markings (5) on the assembly plate (3)**

➔ Turn the locking ring (2) clockwise by hand by about 45° (□ → □) until it locks into place in the holder on the filter cartridge (1).
➔ Place the filter module on the mounting rails and push it back as far as possible.
➔ Press the locking lever down until it stops in order to ensure sealing between the dirty gas chamber and the clean gas chamber.
➔ Examine seal on inspection door for signs of damage and replace if necessary.
➔ Check mating face on filter housing for fouling and remove dirt if necessary.
➔ Lift inspection door onto the retaining bolts and screw on or close inspection door and tighten locking screws.
➔ Switch machine / plant on again.

Assembly filter cartidges wtith grounded

NOTICE

When installing the filter cartridge (1), attention must be paid that the earthing cable (6) is clamped between the filter cartridge (1) and the assembly plate (3).

Earthing of the filter cartridge (1) is only guaranteed if the earthing cable (6) is clamped between the filter cartridge (1) and the assembly plate (3).

➔ Insert the new filter cartridge (1) from above in the assembly plate (3).

NOTICE

Before inserting the locking ring with UniClean (2) in the filter cartridge (1), make sure that the filter cartridge (1) is pushed fully to the left in the openings in the assembly plate (3), otherwise it will not be possible to lock the locking ring correctly (2).

➔ Push the locking ring with UniClean (2) into the filter cartridge (1).

NOTICE

Attention must be paid to the following:

- **In a closed state ( ), the locking ring (2) must be locked into place in the holder on the filter cartridge (1).**
- **In a closed state ( ), the vertical markings (4) on the locking ring (2) must be in line with the markings (5) on the assembly plate (3).**

➔ Turn the locking ring (2) clockwise by hand by about 45° (↻ →) until it locks into place in the holder on the filter cartridge (1).
➔ Place the filter module on the mounting rails and push it back as far as possible.

NOTICE

The filter is only reliably earthed if the filter module is pressed against the filter housing by the locking lever.

➔ Press the locking lever down until it stops in order to ensure sealing between the dirty gas chamber and the clean gas chamber.

- ➔ Examine seal on inspection door for signs of damage and replace if necessary.
- ➔ Check mating face on filter housing for fouling and remove dirt if necessary.
- ➔ Lift inspection door onto the retaining bolts and screw on or close inspection door and tighten locking screws.
- ➔ Switch machine / plant on again.

13.6.2 Replace filter module

CAUTION

Dust-laden air!

Non-compliance can lead to medium or minor injuries!

Following personal protection equipment is to be worn:

- ➔ Protective goggles
- ➔ Dust protection mask
- ➔ Safety gloves

NOTICE

Make sure that no dust escapes into the environment. If dust has escaped and fallen on the floor when changing filter modules, the area around the machine / plant must be cleaned immediately.

The filter modules laden with pollutant residues and packed in plastic bags must be safely transported to a disposal centre in such a way that pollutants and / or dust cannot escape into the environment.

Disposal must be carried out according to current national legislation.

Disassembly

- ➔ Switch off machine / plant and disconnect electrical power (→ section **“Safety instructions”**)
- ➔ Unscrew inspection door and remove or undo locking screws and open inspection door.
- ➔ Press the locking lever up until it stops.
- ➔ Halfway pull out the filter module.



- ➔ Pull the plastic bag with auxiliary frame over the filter module from below.



➔ Pull the filter module completely out and draw the plastic bag fully over the filter module.
➔ Remove the auxiliary frame and seal the plastic bag.



Assembly

➔ Place the filter module on the mounting rails and push it back as far as possible.
➔ Press the locking lever down until it stops in order to ensure sealing between the dirty gas chamber and the clean gas chamber.
➔ Examine seal on inspection door for signs of damage and replace if necessary.
➔ Check mating face on filter housing for fouling and remove dirt if necessary.
➔ Lift inspection door onto the retaining bolts and screw on or close inspection door and tighten locking screws.
➔ Switch machine / plant on again.

Assembly filter module with grounded

➔ Place the filter module on the mounting rails and push it back as far as possible.

NOTICE

The filter is only reliably earthed if the filter module is pressed against the filter housing by the locking lever.

➔ Press the locking lever down until it stops in order to ensure sealing between the dirty gas chamber and the clean gas chamber.
➔ Examine seal on inspection door for signs of damage and replace if necessary.
➔ Check mating face on filter housing for fouling and remove dirt if necessary.
➔ Lift inspection door onto the retaining bolts and screw on or close inspection door and tighten locking screws.
➔ Switch machine / plant on again.

13.6.3 Replace diaphragm

Disassembly

➔ Switch off machine / plant and disconnect electrical power (→ section **“Safety instructions”**)
➔ Switch off the compressed air supply and depressurize the compressed air system.

NOTICE

For sound insulation hoods with several handles (3), the cover of the sound insulation hood should be opened, secured and closed by two persons.

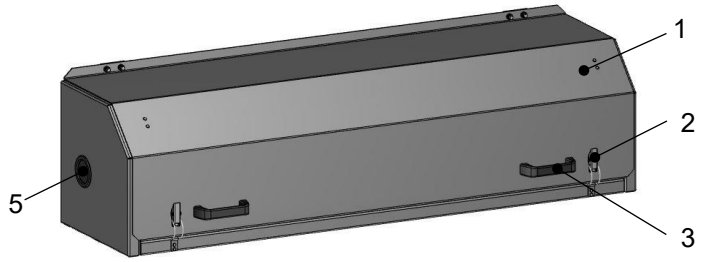

Open cover of the sound insulation hood

➔ Undo the fastening clips (2).*
➔ Raise the cover (1) by the handles (3) and hold tight.*

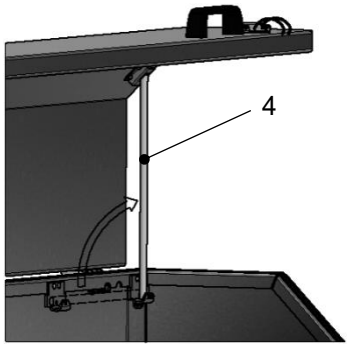

➔ Raise the support rods (4) on each side of the rear wall of the sound insulation hood and insert into the securing elements in the cover.*
➔ Open the condensation drain valve on the pressure tank in order to vent the pressure tank and drain off any condensation or oil.

NOTICE

The pressure gauge on the pressure vessel must show 0 bar.



➔ Unscrew cover (1) on cleaning valve.
➔ Remove diaphragm (2).

Assembly

➔ Check that sealing surfaces on pressure vessel and cover of cleaning valve are clean and clean them if necessary.
➔ Insert a new diaphragm (2).
➔ Refit cover (1) of cleaning valve and screw it into place.
➔ Close the condensation drain valve on the pressure tank.

Close cover of the sound insulation hood

➔ Hold the cover (1) tight by the handles (3).*
➔ Remove the support rods (4) from the securing elements in the cover on each side of the sound insulation hood, fold down and insert into the holders in the rear wall.*
➔ Close the cover (1) slowly and fasten in place with the fastening clips (2).*
➔ Switch compressed air supply on again.
➔ Switch machine / plant on again.

* Applies to a filter with a sound insulation hood. As standard, the filter is available without the sound insulation hood.

13.6.4 Residual dust disposal

CAUTION

Dust-laden air!

Non-compliance can lead to medium or minor injuries!

Following personal protection equipment is to be worn if emptying the dust bin:

- ➔ Protective goggles
- ➔ Dust protection mask
- ➔ Safety gloves

NOTICE

The dustbin must be emptied when necessary. Residual dust must not be stored in the dustbin for any length of time (maximum 6 months).

Before emptying the dustbin, ensure that the machine / plant has been switched off and that automatic secondary cleaning of the filter elements has been completed after switching off the machine / plant.

Procedure

- ➔ Switch off machine / plant.

NOTICE

Before proceeding with the next steps, ensure that automatic Down-Time-Cleaning of the filter elements has been completed after switching off the machine / plant.

- ➔ Push the clamping lever on the dust collector hopper upwards.
- ➔ Pull out dustbin and empty it.

NOTICE

Make sure that no dust escapes into the environment.

Disposal must be carried out according to current national legislation.

- ➔ Push the dust bin in the rails underneath the dust collection hopper as far as it will go to the rear.
- ➔ Push the clamping lever down.

NOTICE

Pay attention that the dust bin is installed correctly again underneath the dust collection hopper as otherwise it is not possible to guarantee a correct seal with the dust collection hopper.

- ➔ Switch machine / plant on again.

Procedure- NFUS3

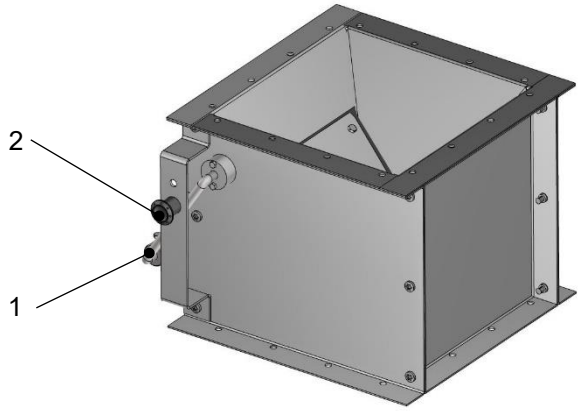

➔ Press the lever arm (1) of the single pendulum flap downwards and lock into place with pin (2) (flap closed). This prevents any further discharge of dust.
➔ Push the clamping lever on the dust collector hopper upwards.
➔ Pull out dustbin and empty it.

NOTICE

Make sure that no dust escapes into the environment.

Disposal must be carried out according to current national legislation.

➔ Push the dust bin in the rails underneath the dust collection hopper as far as it will go to the rear.
➔ Push the clamping lever down.

NOTICE

Pay attention that the dust bin is installed correctly again underneath the dust collection hopper as otherwise it is not possible to guarantee a correct seal with the dust collection hopper.

➔ Push the lever arm (1) of the single pendulum flap upwards and lock into place with pin (2) (flap open). Dust discharge is now possible again.

Procedure - dust bin

➔ Switch off machine / plant.

NOTICE

Before proceeding with the next steps, ensure that automatic Down-Time-Cleaning of the filter elements has been completed after switching off the machine / plant.

➔ Push the clamping lever on the dust collector hopper upwards.

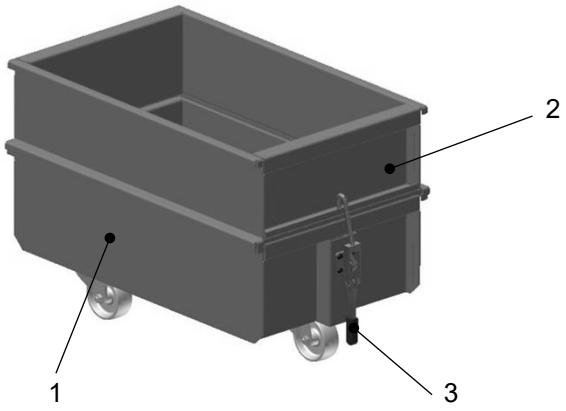

➔ Pull out dustbin (1) and extension (2).
➔ Undo quick clamp (3) on the dustbin (1).
➔ Remove interim section (2) from dustbin (1).
➔ Seal plastic bag using a tying strip.

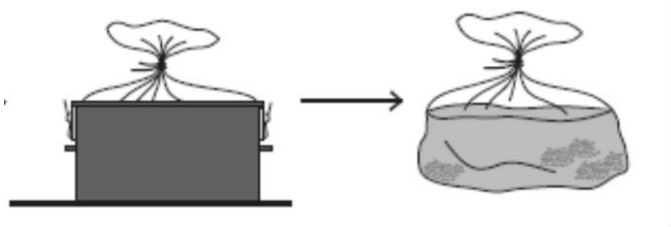

➔ Remove the plastic bag carefully from the dustbin (1).

NOTICE

Make sure that no dust escapes into the environment. If dust spills onto the ground whilst changing the plastic bag, clean the surrounding area of the machine / plant immediately.

Residual materials packed in plastic bags must be transported to the disposal site in a secure manner so that no pollutants and/or dust can escape into the environment.

Disposal must be carried out according to current national legislation.

➔ Insert new plastic bag correctly in dustbin (1).
➔ Place extension (2) back on the dustbin (1) and fasten in place using the quick clamp (3).
➔ Push the dustbin (1) with the extension (2) in the rails underneath the dust collection hopper as far as it will go to the rear.
➔ Push the clamping lever down.

NOTICE

Pay attention that the dust bin is installed correctly again underneath the dust collection hopper as otherwise it is not possible to guarantee a correct seal with the dust collection hopper.

➔ Switch machine / plant on again.

14 Spare parts stock

An important precondition for the continual operation of the machine / plant is a stock of the most important wear and spare parts at the installation site.

Please use the spare parts lists and the corresponding sketches to order spare parts.

We only assume a warranty for the original spare parts we have supplied.

We would like to expressly point out that the original spare parts and accessories that we have not supplied have not been tested and approved by us. The installation and / or use of such products can therefore, under certain circumstances, have a negative impact on the specified properties of the machine / plant and thus reduce the active and / or passive safety measures. We will assume no liability or warranty for damage resulting from the use of non-original spare parts and accessories.

In order to ensure prompt and smooth processing and to avoid time-consuming queries and incorrect deliveries, the following data is to be specified when ordering spare parts:

- Project no.
- Type of the unit
- Designation
- Item no.
- Quantity
- Mode of shipment
- Address for delivery and invoice
- Required delivery time

14.1 Spare parts lists

NOTICE

The spare parts are defined as follows:

1) Type
   V = Wear parts
   R = Spare parts

2) Require stage
   I = Stock keeping absolutely necessary (very important part)
   II = Stock keeping recommended (important part)
   III = Stock keeping not absolutely necessary

14.1.1 Inspection door – standard

Pos.	Installed quantity	Designation Technical specifications	Item no.	Type V/R[1] Require stage[2]
1	X	Seal top / bottom	X	V II
2	X	Seal left / right	X	V II
3	X	Handle	5502205	R III

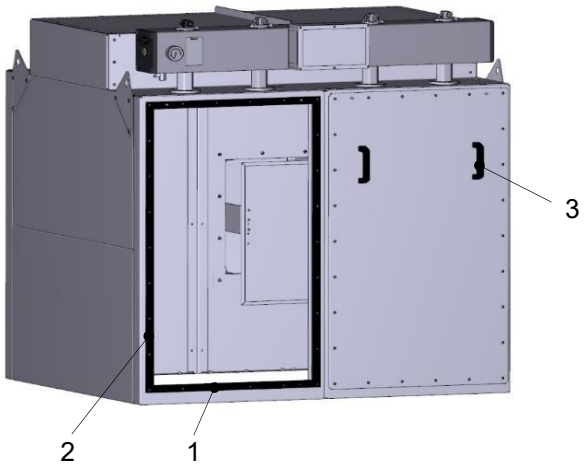

14.1.2 Inspection door – de lux

Pos.	Installed quantity	Designation Technical specifications	Item no.	Type V/R[1] Require stage[2]
1	X	Seal top / bottom	X	V II
2	X	Seal left / right	X	V II

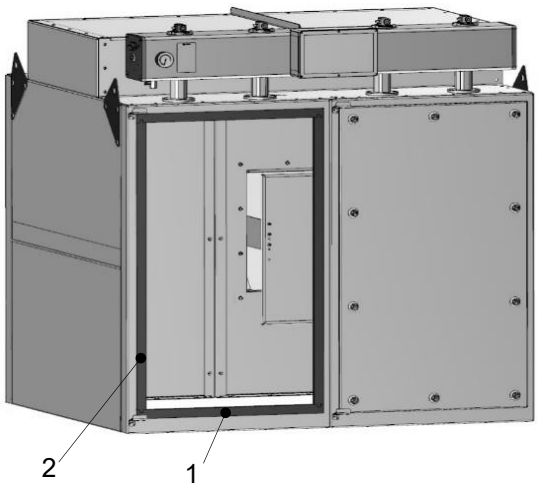

Pos.	Installed quantity	Designation Technical specifications	Item no.	Type V/R[1] Require stage[2]
3	X	Door lock for inspection door	5502204	R III
4	X	Hinge	5501078	R III
5	X	Suspension bracket for hinge	5501081	R III
6	X	Screw	5502173	R III

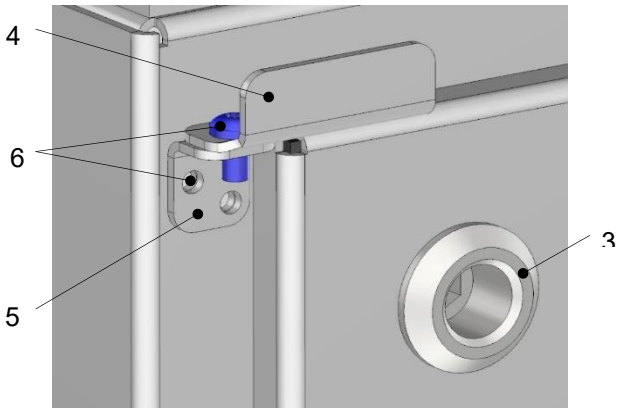

14.1.3 Inspection door – reinforced on hinges

Pos.	Installed quantity	Designation Technical specifications	Item no.	Type V/R[1] Require stage[2]
1	X	Seal top / bottom	X	V II
2	X	Seal left / right	X	V II

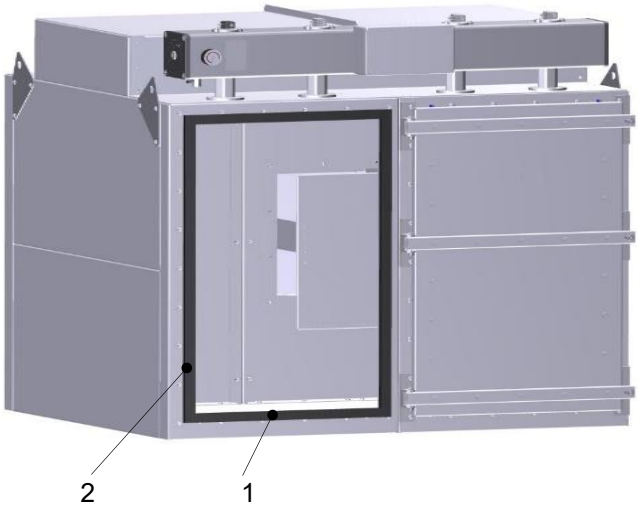

14.1.4 Cartridge filter module

Pos.	Installed quantity	Designation Technical specifications	Item no.	Type V/R[1)] Require stage[2)]
1	X	Filter cartridge Type: X	X	V I
2	X	Mounting plate including seal	5512679	R III
3	X	Seal	5502264	V I
4	X	Screw	5512753	R III
5	X	Washer	5502701	R III

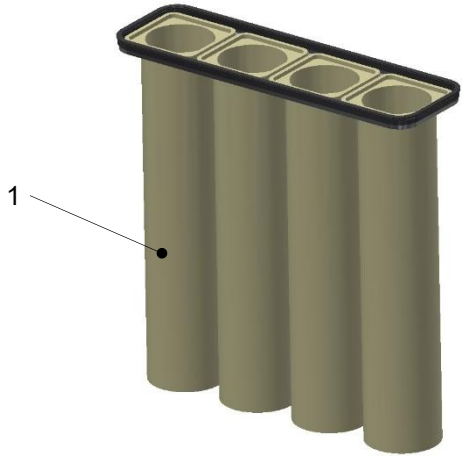

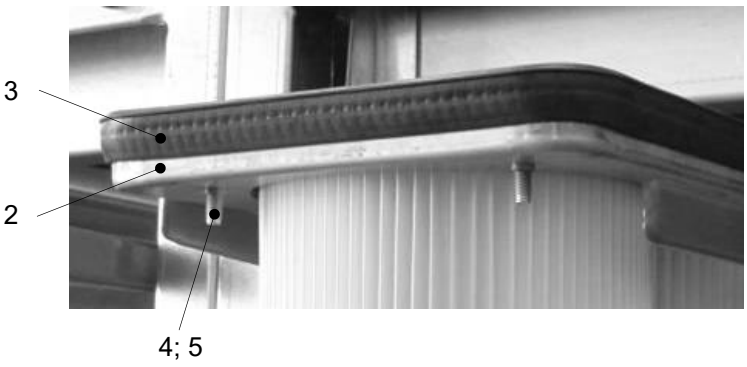

14.1.5 Cassette filter module

Pos.	Installed quantity	Designation Technical specifications	Item no.	Type V/R[1)] Require stage[2)]
1	X	Filter cassette Type: …	X	V I
2	X	Seal	5502264	V I



14.1.6 Securing arm

Pos.	Installed quantity	Designation Technical specifications	Item no.	Type V/R[1)] Require stage[2)]
1	X	Securing arm	5501095	R III
2	X	Hexagon screw	5502238	R III
3	X	Hexagon nut	5502247	R III

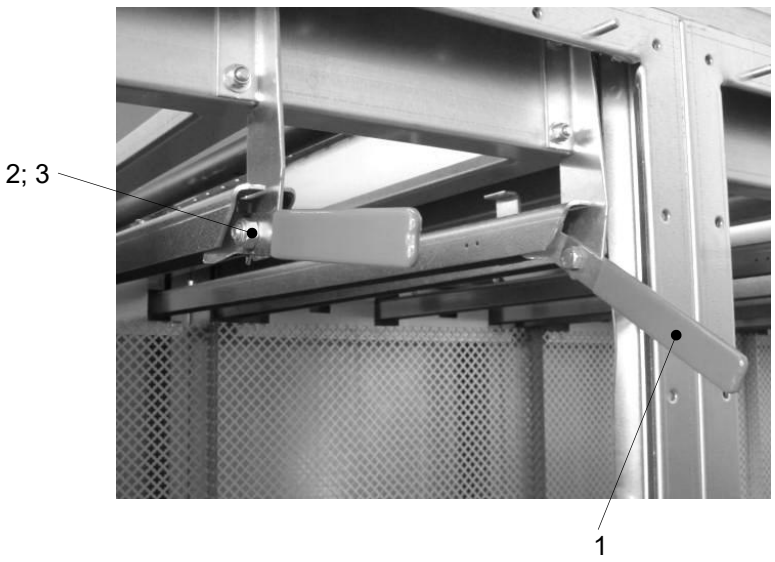

14.1.7 Compressed air facility

Pos.	Installed quantity	Designation Technical specifications	Item no.	Type V/R[1)] Require stage[2)]
1	X	Valve box complete Type: X	X	R II
2	X	Compressed air hose (Set)	X	R III
3	X	Manometer	5500234	R III
4	X	Membrane Temp. -20 to 100°C	73008490	V I
5	X	Connecting cable L = 1 m	5512670	R III
6	X	Connecting cable L = 2 m	5512671	R III
7	X	Connecting cable L = 7 m	5512672	R III
8	X	Connecting cable L = 10 m	5512673	R III
9	X	Connecting cable L = 20 m	5512674	R III
10	X	Coupling for connecting cable	5512675	R III
11	X	Pilot and coil Temp. -20 to 85°C	5117182	V I

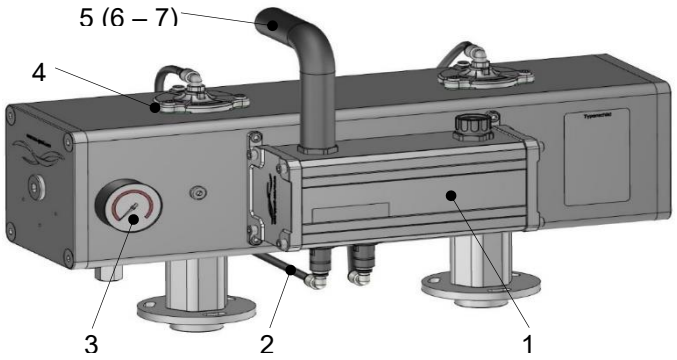

14.1.8 Differential pressure measurement

Pos.	Installed quantity	Designation Technical specifications	Item no.	Type V/R[1)] Require stage[2)]
1	2	Elbow connection	5502191	R III
2	2	Nut for elbow connection	5502202	R III
3	2	Hose Length = X m	5502193	R III
4	2	Air filter	5502252	R III

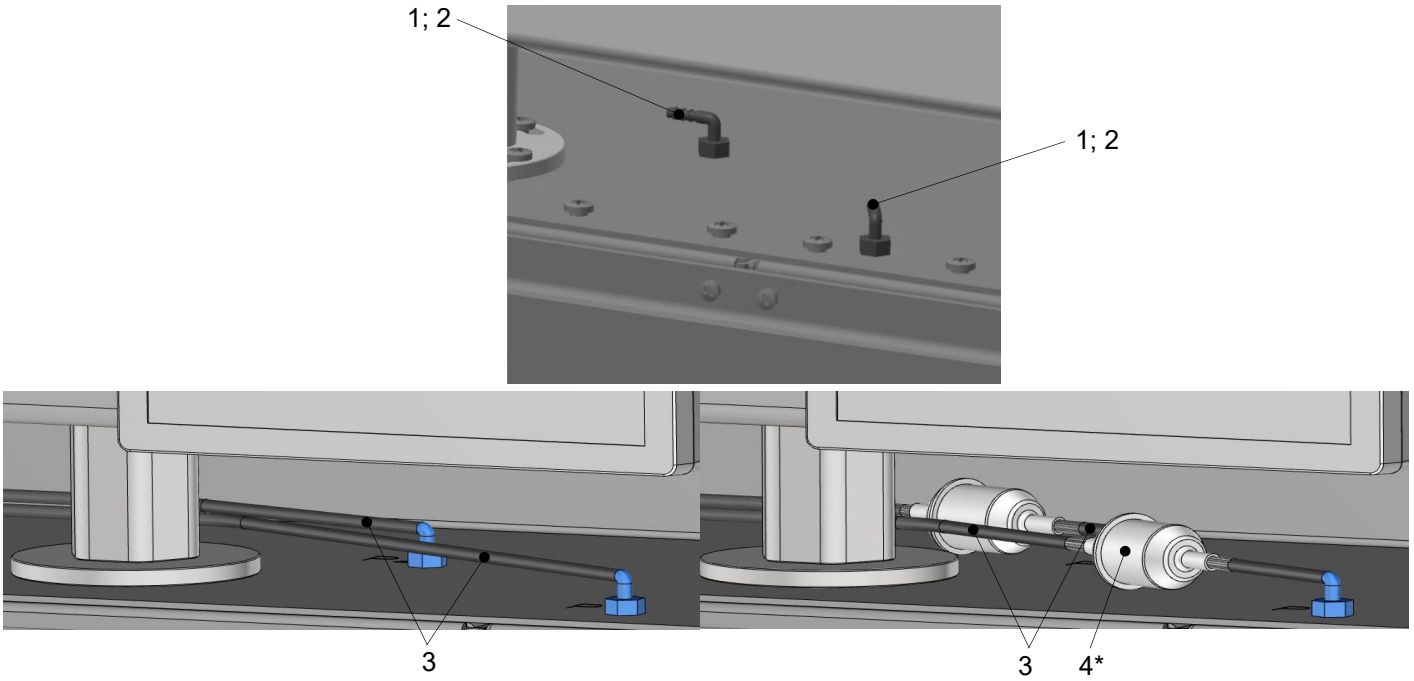

***** for ATEX version filters

14.1.9 Residual dust disposal

Pos.	Installed quantity	Designation Technical specifications	Item no.	Type V/R[1)] Require stage[2)]
1	X	Hose (Set) L = 0,7 m	5505041	R III
2	1	Plastic bag	5502695	R III

14.1.10 Accessories

Pos.	Installed quantity	Designation Technical specifications	Item no.	Type V/R[1] Require stage[2]
	1	Filter regulator (Set) Type: MC202-D00	5500951	R III
	X	Level sensor Type: X	X	R III
	X	Explosion vent Type: X mm	X	V I
	1	Explosion sensor Type: SE-HT	5502253	R I
	X	Explosion relief valve Type: 480 EVN2.0	5505010	R II
	X	Flameless explosion venting device Type: FLEX C2 PRO S	5512426	R II
	1	Flashing alarm lamp	5500602	R III
	X	Filter element for safety filter	7943159	R III

14.1.11 Built-in fan

Pos.	Installed quantity	Designation Technical specifications	Item no.	Type V/R[1] Require stage[2]
1	1	Three-phase AC motor Type: xxx B 5; xxx kW; xxx min^{-1}; xxx V; xxx Hz	X	R III

15 Decommissioning and Dismantling

NOTICE

Observe the corresponding legal regulations for avoiding accidents in the respective country!

15.1 Decommissioning

DANGER

Dangerous electrical voltage!

Non-compliance will result in death or serious injury!

➔ Only qualified electricians may work on electrical equipment.

DANGER

Voltage-carrying parts!

Non-compliance will result in death or serious injury!

Connecting terminals of the main switch are still live when the mains switch on the control cabinet has been set to **“0”** position.

➔ Observe markings on connecting terminals.

WARNING

Rotating or moving parts!

Non-compliance can lead to death or serious injury!

Prior to decommissioning:

➔ Disconnect machine / plant from electrical power supply, i.e. disconnect all energy sources using the main switch on the control cabinet (main switch to position **“0”**).
➔ Secure main switch with a padlock and remove key.
➔ Check that the machine / plant is voltage-free.
➔ Depressurize compressed air supply and vent (empty) pressure vessel.

NOTICE

Decommissioning may only be carried out by authorized and specialist personnel.

The following activities must be carried out to decommission the machine / plant:

➔ Run the machine / plant until completely empty, i.e. the machine / plant must be run without material infeed for as long as necessary until no more dust is discharged.
➔ Switch machine / plant off.
➔ Disconnect the machine / plant completely from all power and supply sources/connections.

15.2 Dismantling

DANGER

Falling machinery parts!

Non-compliance will result in death or serious injury!

- ➔ Cordon off danger area with suitable marking and barrier elements.
- ➔ Place **"Standing under suspended loads forbidden"** sign in a clearly visible position.
- ➔ Appoint supervisor to monitor the danger areas during transport.
- ➔ **Only** use approved load hoisting and handling equipment with adequate load-bearing capacity.
- ➔ Handling equipment may **only** be connected to designated hoisting points on machine parts when lifting.
- ➔ Pipeline parts may **only** be lifted using the designated hoisting points or a non-slip plastic rope.
- ➔ **Do not stand or walk** under suspended loads.

WARNING

Danger of falling!

Non-compliance can lead to death or serious injury!

If working at greater height:

- ➔ Wear and use protective equipment against falls.

WARNING

Danger of falling!

Non-compliance can lead to death or serious injury!

If working above head height:

- ➔ Use tested and approved climbing aids and work platforms.
- ➔ Do **not** use machine parts as climbing aids.

NOTICE

Have dismantling carried out by specialist personnel or by the manufacturer.

NOTICE

The disassembly of the components may take place only in areas, where no explosive atmosphere is present.

16 Disposal

The user is responsible for safe handling of the equipment during the period of its use until environmentally correct disposal.

The disposal of replaced components, dust/cleaning waste and other waste, must comply with the guidelines applicable for the respective materials. These guidelines are normally stipulated by the local respective authorities. If in doubt, contact the employee responsible for safety in your company for advice. The same also applies for auxiliary materials in use such as oil and grease. Disposal must be carried out according to current national legislation.



This sign indicates that the disposal of waste products must be separate from household waste in compliance with the directive on Waste Electrical and Electronic Equipment (WEEE). Any products which are non-functionable or no longer required must be disposed of at a WEEE collection and recycling centre. The correct disposal of waste electrical and electronic equipment serves to protect the environment and people from potential harmful materials that are often contained in electrical and electronic equipment. Your active involvement in the correct disposal of products can help to protect natural resources.

17 Appendix

17.1 Warranty

Scope and duration of the warranty are stipulated in our sales terms and conditions.

This operating manual contains all necessary information and must be read carefully before commissioning the machine / plant.

Worn parts are not covered by the warranty. Warranty claims are to be reported immediately, quoting the plant / project number, immediately upon discovery of the fault.

In addition to the situations named in the sales terms and conditions, the warranty will become void in the event of:

- Non-compliance with the technical data
- Lack of knowledge of or non-compliance with the operating manual and the instructions contained herein with regard to transport, storage, assembly, commissioning, operation and maintenance
- incorrect use
- incorrect handling
- incorrect assembly, commissioning, operation or maintenance
- operation of the machine / plant with faulty safety equipment or incorrectly fitted or non-functioning safety and protection devices
- inadequately qualified or insufficiently trained operating and specialist personnel
- unauthorized constructional changes
- unauthorized alterations to parameters or the software
- unpermitted operating means
- incorrectly executed repair work
- incorrect or incorrectly executed laying or connection of connecting cables
- use of non-original spare parts
- catastrophes as a result of external influence or force majeure

The operator shall ensure under his or her own responsibility,

- that the fundamental safety instructions in this chapter as well as the safety instructions in the individual chapters are observed at all times.
- that correct use is guaranteed and that the machine / plant is operated in accordance with the contractually agreed operating conditions.
- that improper user and incorrect installation or commissioning as well as unpermitted operation are excluded at all times.

17.2 Liability restrictions

All technical information, data and instructions contained in this operating manual for the operation and maintenance / servicing of the machine / plant represent are provided and take into account our experience and expertise in this field to the best of our knowledge.

Drawings and graphics do not necessarily represent the scope of delivery and/or any possible spare part order on the scale of 1:1.

We do not accept any liability for damage or operational disruptions resulting from operating faults, non-compliance with the operating manual or incorrect repair work. We would like to point out explicitly that any spare parts and accessories not supplied by us have not been checked or approved by us.

The installation and use of third-party products can therefore have a negative influence on the prescribed design characteristics of the machine / plant and compromise safety for man, machine and property items.

We are excluded from any liability in the result of damage caused by the use of non-original spare parts and accessories.

Any alterations or modifications to the machine / plant are forbidden unless explicitly approved by the manufacturer in writing. This also applies for the installation and adjustment of safety devices as well as welding on load-bearing parts. Non-compliance results in warranty invalidation.

18 Supplier documentation

Operation instructions Insight Control Panel
Installation and Service Manual Insight Control Panel
Pneumatic components

- Flushing gas-tank system (Reco)
- Filter regulator (Camozzi)

Drives

- Gear motors (Bauer Gear Motor)
- Gear motors (STM)
- Gear motors (Bonfiglioli)
- 3-phase AC motors (Hoyer)
- 3-phase AC motors (Dutchi)
- 3-phase AC motors (VEM)

Transport facilities

- Rotary valve (Nederman Manufacturing)

Measuring instruments

- Level sensor (Carlo Gavazzi)

Explosion pressure relief elements

- Explosion Vent (IEP)
- Explosion relief valve (Hoerbiger)
- Flameless explosion venting device (rsbp)
- Q-Pipe (Rembe)