LCP Ex, LCP - Cartridge dust collector with pulse jet cleaning.



LCP



LCP Ex

Dust collector type	Maximum overpressure [Pa]	Maximum negative pressure [Pa]	Ambient temperature [°C]	Operation temperature [°C]	Pred [bar]
Standard version	2000	6000	Min. -20 Max. +40	Min. -20 Max. +60	0,25
Atex version		5000			

Combustible dust properties	Data	
K_{ST}	Max. 200 bar m s^{-1}	200 - 300 bar m s^{-1}
Explosion class	St 1	St 2

Product marking of LCP Ex

CE Ex II 1(3)/- D Ex h IIIB T135°C Da(Dc)/-

LCP Ex, LCP cartridge dust collectors designed for continuous operation in process and general dust extraction applications with free flowing dust. This new dust collector range offers on-line high efficiency pulse jet cleaning.

Description

All LCP Ex, LCP units have generously sized integral pre-separation chambers to increase their dust load capacity whilst reducing the load on the filter cartridges. Maintenance is from the top, within handrails if specified. A range of space saving integral fans from 5,5 kW to 18,5 kW may be specified, with optional air silencers. Larger units may be served by floor mounted high efficiency Combifab fans.

Options

- Hopper in the pyramid or trough version.
- Dust can be collected in a bin (50L or 100L with wheels), big-bag outlet.
- Discharge can be also via counter balanced valve.
- Range of integral fans from 5,5 kW to 18,5 kW with optional silencers with weather cowl.
- Ground mounted *Combifab* fans for higher airflow volumes.
- ATEX certified explosion relief panels when handling combustible dusts (St1, St2 or St3),
- Heat tracing and insulation up to 60°C for ATEX and non-ATEX units.
- *Insight Control Panel* for monitoring and control, Insight Ready (connectivity module to connect to Nederman's cloud based filtration knowledge center, Insight Analytics).





Specification

- 3 mm steel, painted C2-M/C3-L.
- Bolted asssembly.
- Weatherproof for exposed locations.
- On-line cleaning with high efficiency diaphragm valves.
- Large integral pre-separation chamber.
- Different cartridge media types (SC 100, 108, 140, 148, 151, 160, 178, 190), selected to best fit the application.
- Standard legs calculated in accordance to Eurocode 3s.a.:
  - wind loads (EN 1991-1-4 zone 2),
  - earthquake (0,08x g horizontal acceleration).

Cartridge material

- SC 100 - Pleated high quality thermal bonded polyester fiberes.
- SC 108 - Spunbond polyester wth nanofiber
- SC 140 - as SC100 but with metallised antistatic treatment.
- SC 148 - Spunbond polyester with antistatic treatment and nanofiber
- SC 151 - Polyester, PTFE membrane, antistatic.
- SC 160 - Spunbond polyester + ePTFE membrane
- SC 178 - is 80% cellulose, 20% polyester material with nanofiber.
- SC 190 - as CA100 but with PTFE type dust release treatment.

Requirements:

- Compressed air requirements: Normal operating pressure for cleaning air - 6 bar (max. 7 bar) dry and oil free.
  The noise level pic of jet cleaning system is 61 [Db] measured 1,5m from tank filed at pressure 6,5Bar
- Electrical requirements for Fan: 400V, 3 phase, 50Hz and 480V, 3 phase 60 Hz.

Other voltages available by request.

Dimensions & weights

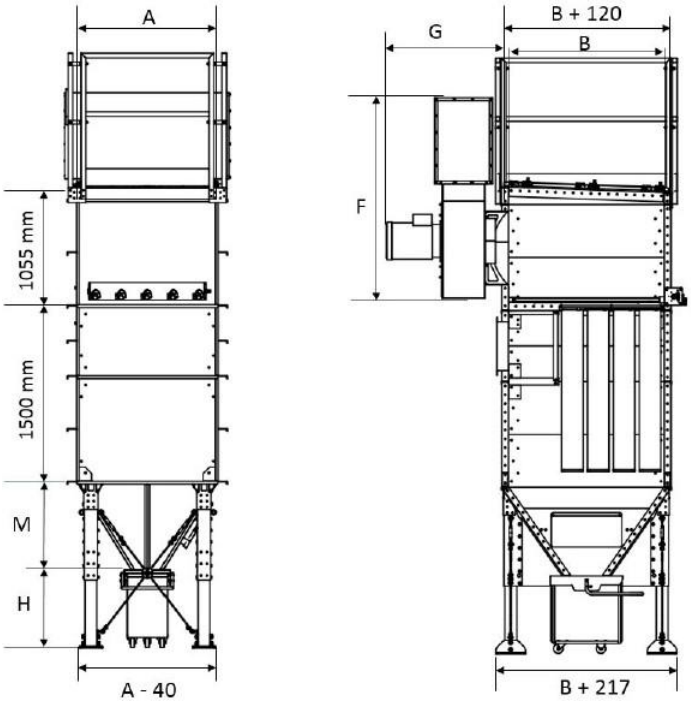

A (length mm of the chamber)	B (width mm of the LCP)	M		H (height mm of acccessories)
		Height of the hopper (mm)	Type	
900	1320	755**	pyramidal	400 - 50L bin with wheels 665 - 100L bin with wheels 315 - screw conyeyor 300 - rotary valve NRS(Z)3 350 - JAUDT 1860 - NRS(Z) 3 + big bag + pallet
1200			pyramidal	
1800			pyramidal, trough	
2100			pyramidal, trough	
2400			pyramidal, trough	
1200	2200	1384**	pyramidal	
1800*			pyramidal	
2100*			pyramidal	
2400			pyramidal, trough	
3000*			pyramidal, trough	
3300*			pyramidal, trough	
3600			pyramidal, trough	
4200*			pyramidal, trough	
4500*			pyramidal, trough	
4800			pyramidal, trough	

*If 50L or 100L bin add 650 mm for transition.
**If screw conveyor add 100 mm of transition for hopper height.

Fan motor power [kW]	F [mm]	G [mm]	Weight excl silencer and weather cowls [kg]	Noise level dB(A)**	
				with silencer	without silencer
5 ,5	1685	729	92	79	85
7.5 (S)*	1685	729	97	81	85
7.5 (L)*	1850	893	147	82	85
11	1850	998	179	84	87
15	1850	998	192	84	90
18,5	1850	998	210	85	94

* - two quantities of the fan with an engine power 7,5 kW
** - Measuring surface sound pressure level in 1 m distance for an open outlet or silencer at the outlet [dB(A)]. Applies to all fans with a frequency of 50 Hz.

Length mm of the dust collector	Screw conveyor length mm	
	1320 mm width	2200 mm width
900	N/A	N/A
1200	N/A	N/A
1800	1170	N/A
2100	1320	N/A
2400	1470	1470
3000	2220	2088
3300	2370	2370
3600	2670	2670
4200	3270	3270
4500	3570	3570
4800	3870	3870

Length (mm)	Number of hoppers			
	Pyramidal		Trough	
	1320 mm width	2200 mm width	1320 mm width	2200 mm width
900	1	N/A	N/A	N/A
1200	1	1	N/A	N/A
1800	2	1	1	N/A
2100	2	1	1	N/A
2400	2	2	1	1
3000	3	2	1	1
3300	3	2	1	1
3600	3	3	1	1
4200	4	2	1	1
4500	4	3	1	1
4800	4	4	1	1

NOTE! Units without hoppers or where the hopper will be made locally or by others, no ATEX marking is available and will need to be certified locally.

A (length mm of the chamber)	CAC [kg]		DAC [kg]		HOPPER [kg]				HANDRAILS [kg]
	1320 width mm	2200 width mm	1320 width mm	2200 width mm	1320 width mm - pyramidal	2200 width mm - pyramidal	1320 width mm - trough	2200 width mm - trough	
900	330	N/A	329	N/A	360	N/A	N/A	N/A	30
1200	390	593	362	458	390	570	N/A	N/A	30
1800	550	796	463	566	615	660	577	N/A	60
2100	610	898	496	597	645	685	570	N/A	60
2400	670	1000	529	628	765	1010	661	710	60
3000	N/A	1203	N/A	736	N/A	1100	N/A	1057	90
3300	N/A	1305	N/A	767	N/A	1125	N/A	1082	90
3600	N/A	1407	N/A	798	N/A	1450	N/A	1110	90
4200	N/A	1610	N/A	910	N/A	1240	N/A	1274	120
4500	N/A	1712	N/A	943	N/A	1565	N/A	1362	120
4800	N/A	1814	N/A	976	N/A	1760	N/A	1390	150

ACCESSORIES	kg	Qty
Bin 50/100L	23	1 pcs
Cartridges	5	1 pcs
Ladder	102	1 pcs

Filter area vs dust collector type (Compressed air consumption is 32,4 [m³/h]**)

Dust collector length (mm)	Dust collector type*	Quantity of cartridges	1320 width			2200 width		
			Filter area m²			Filter area m²		
			Cartidge material: SC100,140, 151,190	Cartidge material: SC178	Cartidge material: SC108,148,160	Cartidge material: SC100,140, 151,190	Cartidge material: SC178	Cartidge material: SC108,148,160
900	LCP 3-9: 3x3	9	54	119	59	N/A	N/A	N/A
900	LCP 3-12: 3x4	12	72	158	78	N/A	N/A	N/A
1200	LCP 4-16: 4x4	16	96	211	104	N/A	N/A	N/A
1200	LCP 5-20: 5x4	20	120	264	130	N/A	N/A	N/A
1800	LCP 6-24: 6x4	24	144	317	156	N/A	N/A	N/A
1200	LCP 4-28: 4x7	28	N/A	N/A	N/A	168	370	182
2100	LCP 8-32: 8x4	32	192	422	208	N/A	N/A	N/A
1200	LCP 5-35: 5x7	35	N/A	N/A	N/A	210	462	228
2400	LCP 9-36: 9x4	36	216	475	234	N/A	N/A	N/A
2400	LCP 10-40: 10x4	40	240	528	260	N/A	N/A	N/A
1800	LCP 6-42: 6x7	42	N/A	N/A	N/A	252	554	273
2100	LCP 7-49: 7x7	49	N/A	N/A	N/A	294	647	319
2100	LCP 8-56: 8x7	56	N/A	N/A	N/A	336	739	364
2400	LCP 9-63: 9x7	63	N/A	N/A	N/A	378	832	410
2400	LCP 10-70: 10x7	70	N/A	N/A	N/A	420	924	455
3000	LCP 11-77: 11x7	77	N/A	N/A	N/A	462	1016	501
3300	LCP 12-84: 12x7	84	N/A	N/A	N/A	504	1109	546
3300	LCP 13-91: 13x7	91	N/A	N/A	N/A	546	1201	592
3600	LCP 14-98: 14x7	98	N/A	N/A	N/A	588	1294	637
3600	LCP 15-105: 15x7	105	N/A	N/A	N/A	630	1386	683
4200	LCP 16-112: 16x7	112	N/A	N/A	N/A	672	1478	728
4500	LCP 17-119: 17x7	119	N/A	N/A	N/A	714	1571	774
4500	LCP 18-126: 18x7	126	N/A	N/A	N/A	756	1663	819
4800	LCP 19-133: 19x7	133	N/A	N/A	N/A	798	1756	865
4800	LCP 20-140: 20x7	140	N/A	N/A	N/A	840	1848	910

Figure 2. Air flow range for 4.0 to 7.5 S kW

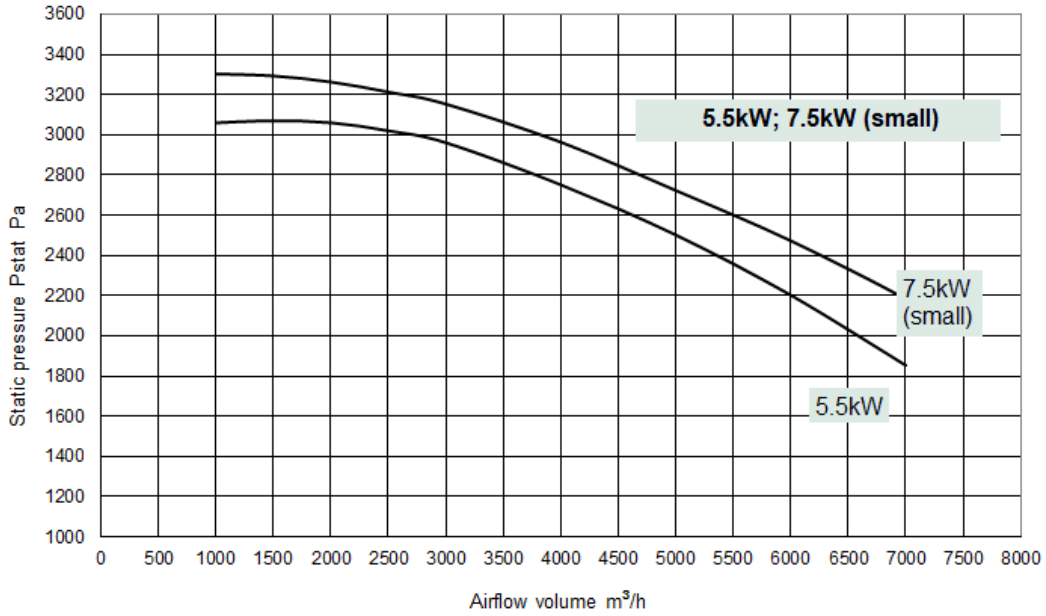

Figure 3. Air flow range for 7.5 L to 11,5 kW

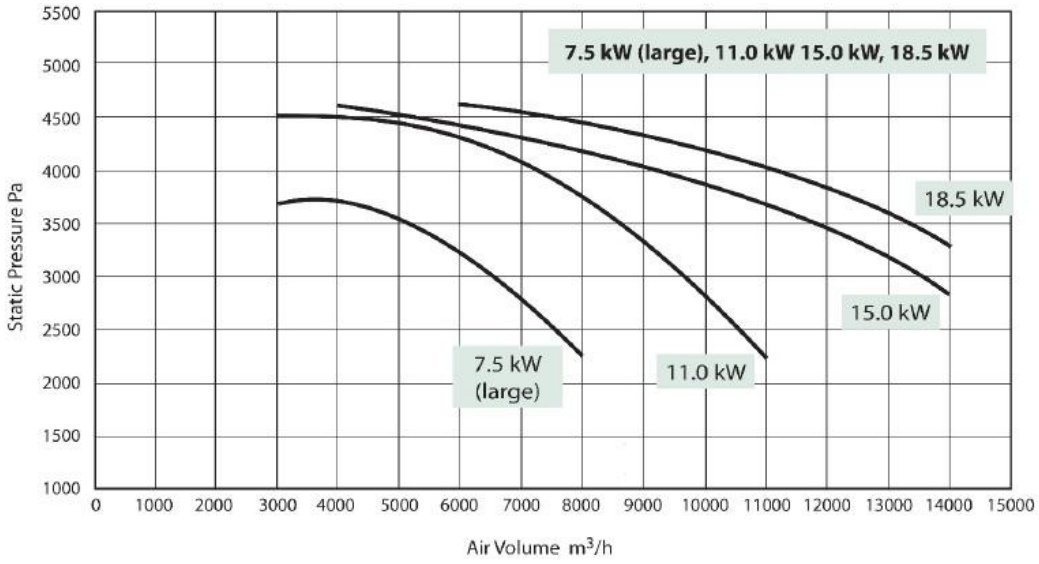

Inlet dimensions

410x410 mm

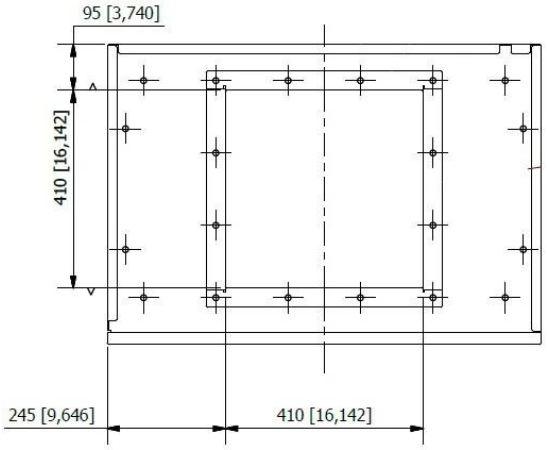

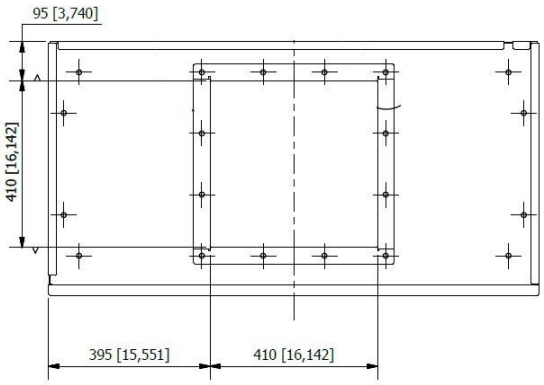

No module panel mounted with 100 mm duct flange

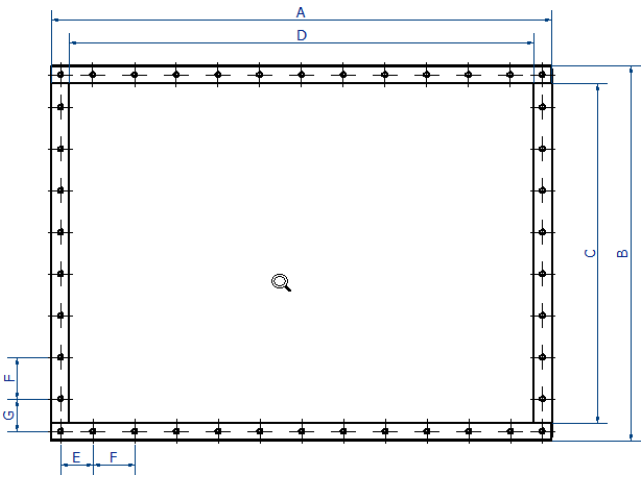

Outlet dimensions

920x586 mm

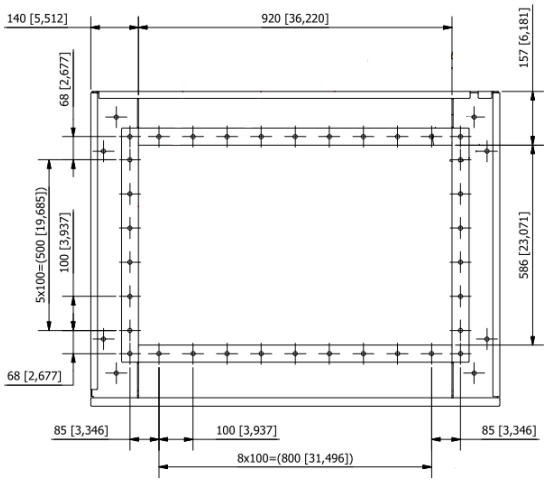

610x610 mm

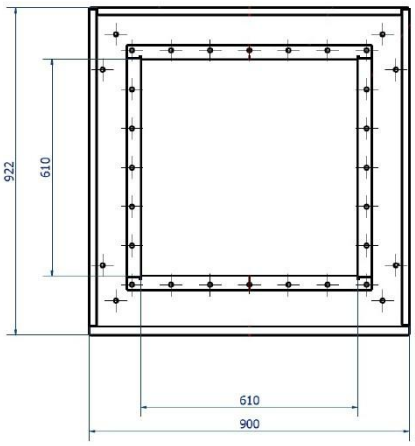

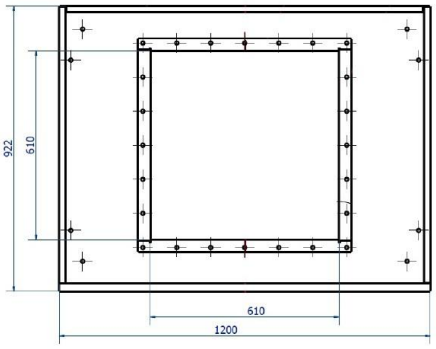

Type	A [mm]	B [mm]	C [mm]	D [mm]	E [mm]	F [mm]	G [mm]
Inlet dimension	900	600	516	814	77	100	78
	1200	600	516	1114	77	100	78
Outlet dimension	900	900	816	814	77	100	78
	1200	900	816	1114	77	100	78

Inlet / Outlet Description, T=2mm welded FL

Item no.	Inlet / Outlet Description	A [mm]	B [mm]	C [mm]
73009093	FL 700	710	710	300
73009094	FL 450	490	490	250
73009095	FL 1200	1200	896	880
73009096	FL 1000	1200	596	1000
73009097	FL 1000	900	896	400
73009098	FL 800	1020	686	350
73009099	FL 800	900	596	350

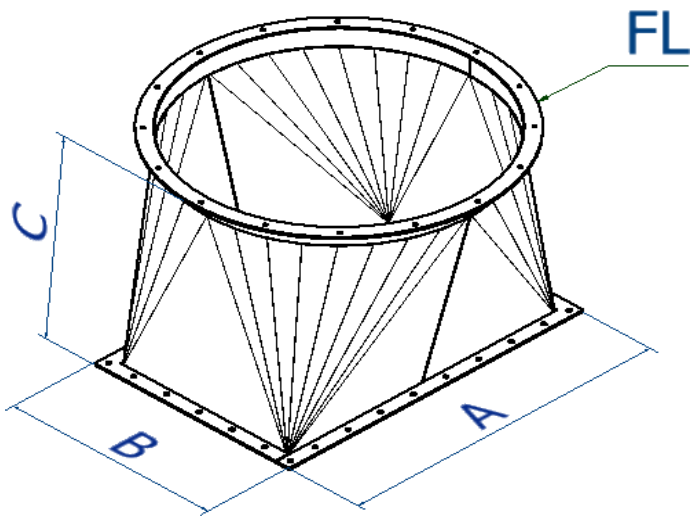

Accessories

Figure	Description	Figure	Description
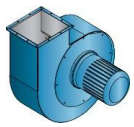	Integral fan (NF)		Toebord with rail
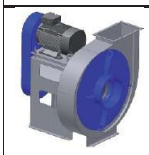	External fan (Combifab)		Access ladder
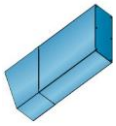	Silencer with weather cowls		
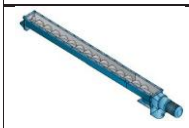	Screw conveyor (PSK, PSR)		
	Rotary valve (NRS3, NRSZ3)		Ladder blockade
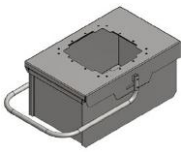	Dust collecting bin 50L or 100L (available with wheels)	-	Explosion detection sensor
-	Big bag	-	Differential pressure indicator
	Double flap valve	-	Trace heating system and thermal insulation
	Explosion panel	-	Controler system for complete dust extrac-tion installation - according with the special requirements of customer
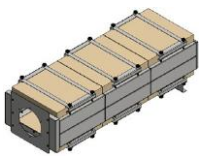	Secondary filter H13		