Product leaflet

FMC cartridge filter

Compact cartridge filter for solving dust problems within a wide range of industries



This content is protected under copyright law, furnished for informational use only, and subject to change without notice. © Nederman Holding AB

FMC cartridge filter

- Cartridges are available in a wide variety of materials to suit most applications, whatever the type and quantity of dust.
- Their modular compact design means they can be installed close to the source of dust, thus reducing energy consumption.
- The FMC filter cartridges are accessible and easy to exchange.
- Intelligent ECO-efficient filter controller minimize maintenance and energy costs.
- Quick release waste bin

The FMC cartridge filter series offers many operational benefits thanks to its compact design and patented UniClean® system. The special design of UniClean® cartridges guarantees consistent and effective cleaning. The filter cartridges are available in two different lengths (type L or A).
The FMC filters are designed for air volumes between 1 200-21 000 m3/h containing different types of dust. The FMC filters can be fitted with different types of filter cartridges, positioned vertically to prevent dust building up on the filter material.

The filter is designed for an outdoor location and is as standard designed for a top mounted fan.

Standard cartridges in polyester CA100: 10 g/m3 max. fine or coarse dust.
Cartridge in nanofiber CA178: 1 g/m3 max. cold fumes

Inlet and outlet dimensions 160, 250, 315, 400, 500 or 560 mm.
Air inlet section adapted for a deflector/wear plate.
Primary separation chamber option with perforated screen.
Measurement of differential pressure and control of the cleaning system: DFC-8M, energy supply 230 V – 50 Hz, 110V - 60 Hz.

This content is protected under copyright law, furnished for informational use only, and subject to change without notice. © Nederman Holding AB

FMC cartridge filter

Certifications	[ce]
Installation	Indoor, Outdoor
Material	Housing in galvanised sheet steel (2mm)
[ProductSuitableForCombustableDust]	False
Filter cleaning method	[PulseJet]
Application	[dust], [fumes]
[ProductWorkingpressure]	-6,0 to 1,5
Dustbin volume (l)	50 or 100 or without
Capacity (max airflow m3/h)	21000
Operating Temperature	-20 to 75 Deg. C.

This content is protected under copyright law, furnished for informational use only, and subject to change without notice. © Nederman Holding AB

Models

	Item no	Filter type	Number of filter elements
	FMC200-2Ls	Cartridge	8
	FMC200-2Lc	Cartridge	8
	FMC200-4Ls	Cartridge	16
	FMC200-4Lc	Cartridge	16
	FMC200-6Ls	Cartridge	24
	FMC200-6Lc	Cartridge	24
	FMC200-8Ls	Cartridge	32
	FMC200-8Lc	Cartridge	32
	FMC200-2As	Cartridge	8
	FMC200-2Ac	Cartridge	8
	FMC200-4As	Cartridge	16
	FMC200-4Ac	Cartridge	16
	FMC200-6As	Cartridge	24

This content is protected under copyright law, furnished for informational use only, and subject to change without notice. © Nederman Holding AB

Models

	Item no	Filter type	Number of filter elements
	FMC200-6Ac	Cartridge	24
	FMC200-8As	Cartridge	32
	FMC200-8Ac	Cartridge	32

This content is protected under copyright law, furnished for informational use only, and subject to change without notice. © Nederman Holding AB

Accessories

	Accessory	Item no
	Damper type NFUS3	5501395
	Discharge bin 50 l with wheels	5501274
	Discharge bin 50 l without wheels	5501273
	Discharge bin 100 l with wheels	5501275
	Adaptor for bin with bag	5505033
	Adaptor for 50 l bin with bag incl. fitting	5505034
	Adaptor for 100 l bin with bag incl. fitting	5505035
	Hose set for bin balancing	5505041
	Single backpack for 4 modules	5509660
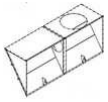	Single backpack for 8 modules round inlet from the top pos L	5501169
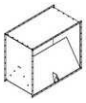	Double backpack for 4 modules	5509661
	DUAL silencer for FM600 series fan with air grille	5501813
	DUAL silencer for FM6800 series fan with air grille	5501830

This content is protected under copyright law, furnished for informational use only, and subject to change without notice. © Nederman Holding AB

Accessories

	Accessory	Item no
	DUAL silencer for FM1000 series fan with air grille	5501854
	DUAL silencer for FM600 series fan with air grille and rain cover	5501814
	DUAL silencer for FM6800 series fan with air grille and rain cover	5501832
	DUAL silencer for FM1000 series fan with air grille and rain cover	5501855
	DUAL silencer for FM600 series fan with flanged outlet for duct connection	5501815
	DUAL silencer for FM6800 series fan with flanged outlet for duct connection	5501833
	DUAL silencer for FM1000 series fan with flanged outlet for duct connection	5501856
	Isolation box for FM pressure tank, 2 modules	5501317
	Isolation box for FM pressure tank, 4 modules	5501318
	Isolation box for FM pressure tank, 6 modules	5501319
	Isolation box for FM pressure tank, 6 modules	5501320
	Level sensor with beacon, 230V	5504475
	Cable gland M40 for levelsensor	5512245

This content is protected under copyright law, furnished for informational use only, and subject to change without notice. © Nederman Holding AB

Accessories

	Accessory	Item no
	Noise enclosure for FM600 fan	5501783
	Noise enclosure for FM800 fan	5501784
	Noise enclosure for FM1000 fan	5501799
	Platform for FM filter with 2 modules	5501356
	Platform for FM filter with 4 modules	5501357
	Platform for FM filter with 6 modules	5501358
	Platform for FM filter with 8 modules	5501359
	Platform for FM filter with 6 modules, single outlet hopper	5501373
	Platform for FM filter with 8 modules, single outlet hopper	5501374

This content is protected under copyright law, furnished for informational use only, and subject to change without notice. © Nederman Holding AB

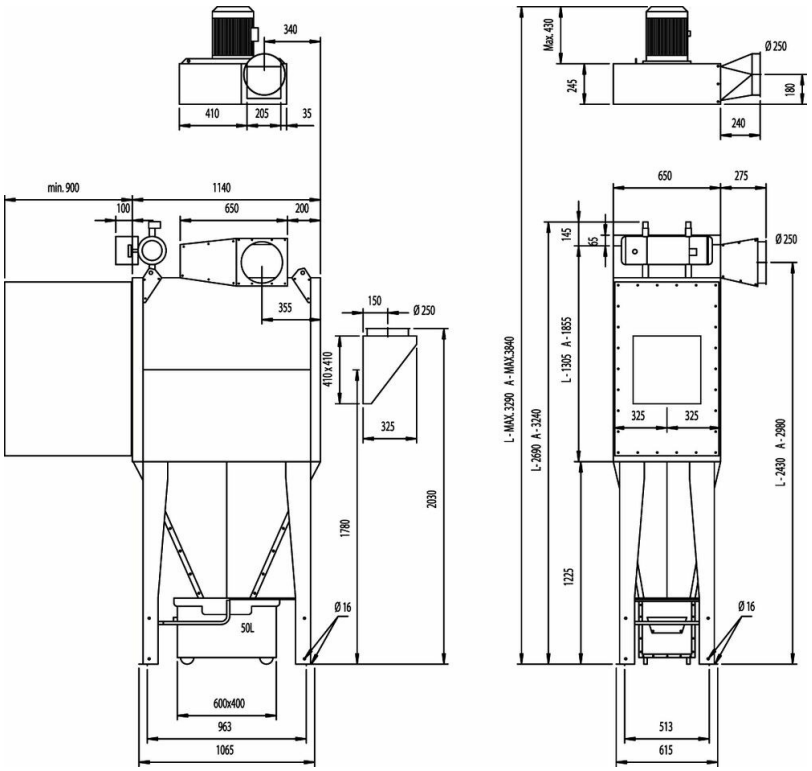

FMC version 2L and 2A shown with 50L bin

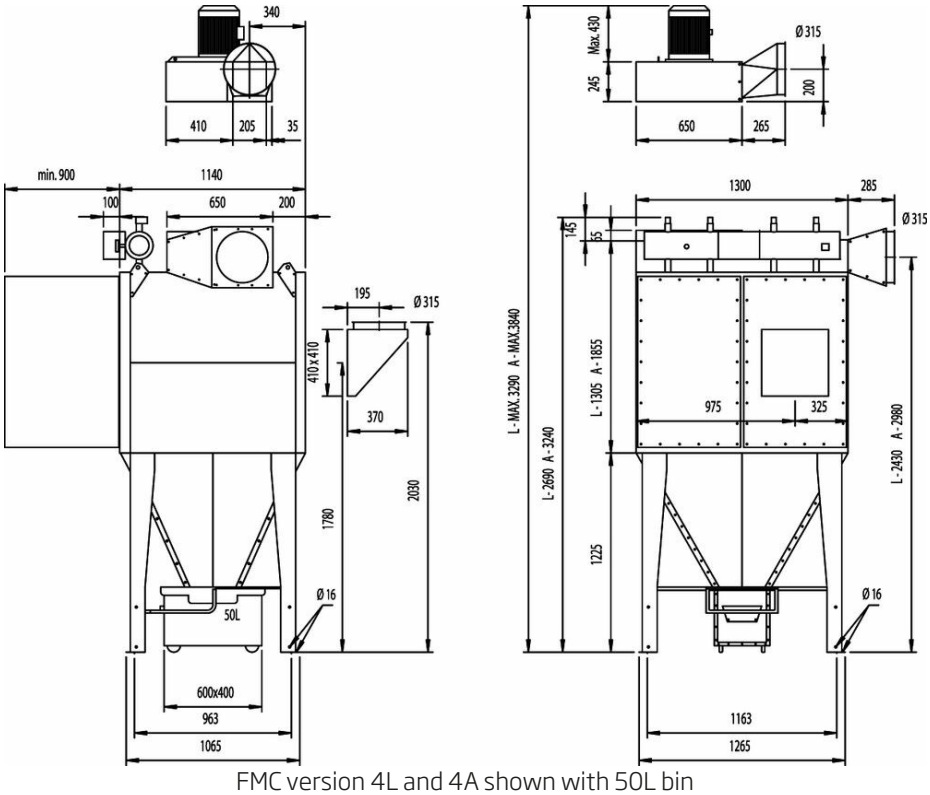

FMC version 4L and 4A shown with 50L bin

This content is protected under copyright law, furnished for informational use only, and subject to change without notice. © Nederman Holding AB

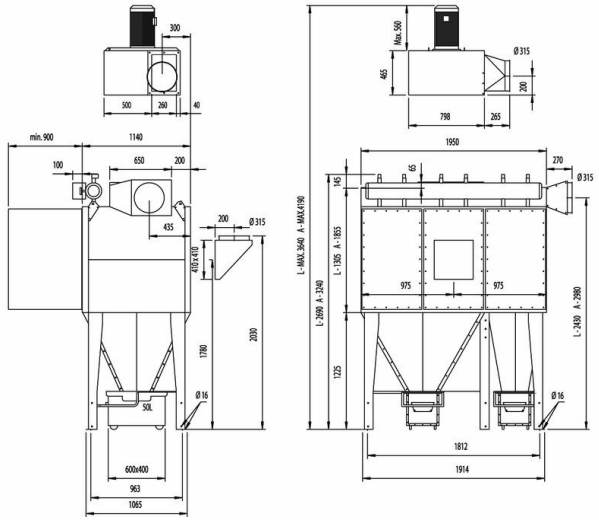

FMC version 6L and 6A shown with 50L bin

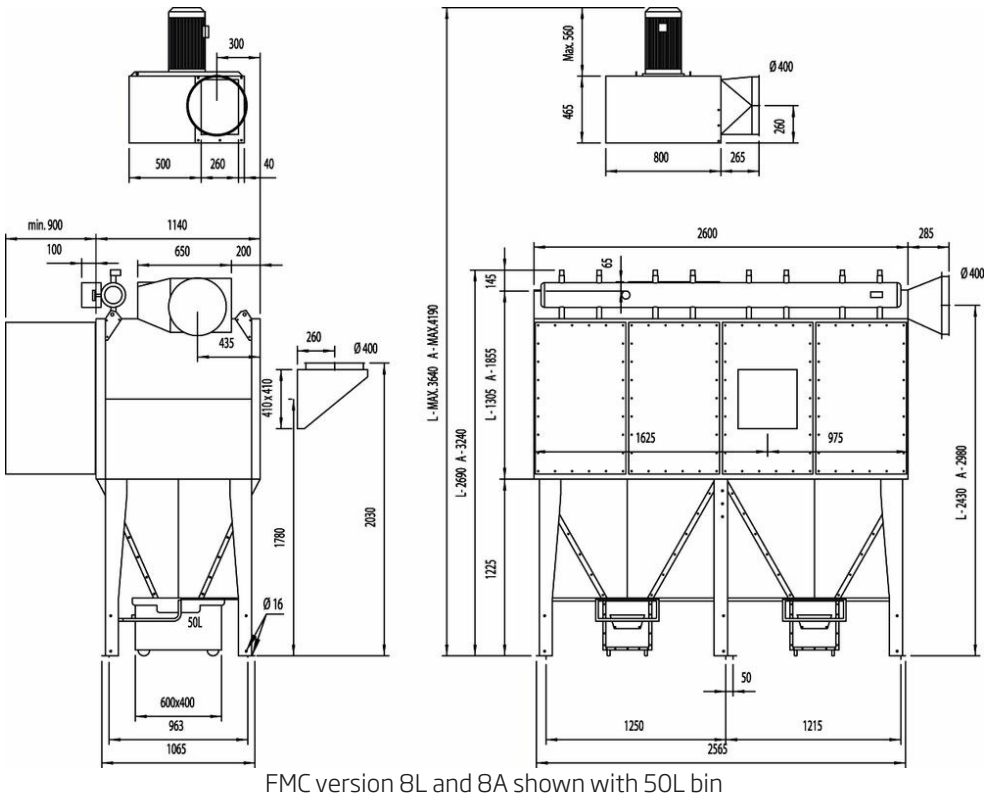

FMC version 8L and 8A shown with 50L bin

This content is protected under copyright law, furnished for informational use only, and subject to change without notice. © Nederman Holding AB