UPLIFTING COMPANY

AUTOP STENHOJ



Product Catalogue 2016-2017

ЭКВИНЕТ

www.equinet.com.ua



Welcome to AUTOPSTENHOJ.



As our customer, you can rely on AUTOPSTENHOJ to provide you with innovative products and solutions which could be either "off-the-shelf" or tailor-made to suit your requirements. Solutions have been brought to life for customers including car manufacturers, workshop operators, car rental companies and many others!

Whether you are looking for a one-off customized solution, a single piece of workshop equipment or an entire workshop project, AUTOPSTENHOJ have the know-how and technical capabilities to fulfill your requirements. Autop has been in existence since 1949 and Stenhøj for over 100 years! But who are we?

We are AUTOPSTENHOJ, a new brand for proven, tried and tested workshop equipment products! Since 1996, autop has been part of the Stenhøj group; we have now combined our strengths under one roof and created our new AUTOPSTENHOJ brand. This move fulfills our customers' requirements and demands for excellent solutions. At AUTOPSTENHOJ we have relationships built on strong foundations of trust and cooperation.

Quality – Backed up by national and international standards.
Transparency – Giving customers confidence with a uniform pricing structure.
Experience – Built up over 60 years in autop and over 100 years in Stenhøj.

Welcome to AUTOPSTENHOJ!

SØREN L. MADSEN
CEO

KARSTEN MEINSHAUSEN
CSMO



Quality, transparency and experience ...

Find out more:
www.autopstenhoj.com



... from all angles!

Easy to find everything you need.
Not only a lot of technical data, but also lots of other useful information. And remember, we are able to produce a bespoke product to suit your special requirements! We are always open to your requests and suggestions, you help us grow!

Foreword 2
Vision 6
History 8
Competence 10
Service & Aftersales 12
References 14
Environment 16

Inground lifts 18
- Center-ram lifts 24
- Twin-ram lifts 38
- 4-ram lifts 68

Surface-mounted lifts 72
- Single-post lifts 78
- 2-post lifts 80
- 4-post lifts 108
- Scissor jacks 122
- Scissor lifts 128

Heavy duty lifts 138

Test equipment 152
- Plate brake testers 154
- Roller brake testers 156
- Test lanes 160
- Accessories 164

Special Solutions 166
Approvals 168
Accessories 170

autop Maschinenbau GmbH
Sandkampstraße 90
48432 Rheine | Germany
+49 5971 8602-02
+49 5971 8602-25
info@autopstenhoj.com

STENHOJ A/S
Barrit Langgade 188-190
7150 Barrit | Denmark
+45 76821-330
+45 76821-331
info@autopstenhoj.com



We expect a lot from you: Challenge us!



In order to achieve a goal, you need to have one first. We have a very clear goal which is: AUTOPSTENHOJ wants to be the market-leading supplier and your first choice for lifting equipment, workshop equipment and associated products and services. We need your support to achieve this; challenge us! This is our goal!

Your needs and demands are what keeps us going and driving us forward into the future! The best solution delivered on time. For you, our valued customer!

1982
Franz Hörnstein and Egon Senger first appear together with the name autop on the market and establish the name „Dialogue Reception“ and „Direct Reception“.

1978
Preceding the “customer reception area” the basic idea is published as „reception

1965
Egon Senger founded PERKUTE in Rheine.

1949
Franz Hörnstein founded an enterprise for hydraulic lifts in Swabia Biberach.

Two independent successful brands ...

... now united as one.

2016 is an important year for AUTOPSTENHOJ; this is the year when both companies come together and combine their strengths.

Up until now both autop and Stenhøj have enjoyed great success independently in their respective markets. autop has in fact become one of the leading manufacturers of hydraulic inground lifts and Stenhøj of course is known around the world from their success in selling lifts, compressors and hydraulic presses.



autop began in 1949 and was the first company producing hydraulic lifting platforms specifically manufactured for car workshops. Since then autop has come a long way, see our progress in the graph above:

A significant step – also in the day-to-day discussions we have with our customers – was the merge with Stenhøj in 1996, when autop became a 100% subsidiary of the Danish Stenhøj group. This was a solid base for intelligent synergies, transfer of know-how and coordination of manufacturing components.

STENHØJ

The modern day car, as we know it with its combustion engine, was created 30 years ago by Carl Benz. Dane Sigurd Stenhøj founded Stenhøj in 1917 on his own.

Up until 1986, the company was 100% family-owned, it was then part of an investments company for a short while, but then after 1993 it was once again owned by the family. This is only a short part of the success story. Today the Stenhøj group has 8 subsidiaries and 2 additional affiliated companies. We employ over 500 employees in 6 countries and our products are exported to over 60 countries worldwide!



We develop the future. And beyond.



Everyone has to start somewhere. We started over a century ago, meaning we can rely on a high level of experience today. This gives us a great foundation for our one brand of AUTOPSTENHOJ. We build on our knowledge and as such we have many designers and engineers that work continually to ensure that we keep up with technological advances and that our products meet the requirements of our customers – both now and in the future!

A development milestone was the legendary Triolift in 1979. A totally new concept to work simultaneously on three different levels.

We are proud to employ not only some qualified people, but hundreds of specialists!

Every new generation of technology needs a new generation of people. To secure our power of innovation, we at AUTOPSTENHOJ continuously insist on further training of our employees and the training of young people. Thus many trainees and dual students are able to face the challenges of tomorrow. We can promise one thing: Even if we have started small, we have big plans for the future.





We do this.

Our products are designed for a long lifetime of service. Therefore, a customer relationship does not end with the purchase of a lift, but it continues to grow. And that can be a very long customer relationship. Many of our lifts have been in operation for more than 30 years now. We still keep the relevant spare parts in stock and this is true for a number of very old lift types too! As our products are built to last we hardly ever sell these! We can be proud of the fact that more than 70,000 of our inground lifts are operating worldwide on a daily basis.

A professional lift installation.

The best lift in the world is useless if it is not installed correctly. AUTOPSTENHOJ has the experience, equipment and capabilities to provide your complete installation service which can also include construction work.

AUTOPSTENHOJ. More than 100 years of experience.

Our partners are also factory trained to deliver the same customer experience!

Our installation is always professional so that other operations in your workshop can continue quickly. But nevertheless, your employees might stop work because they are so surprised how quick the installation is being carried out!

Constant training programs for service team.

Over the decades our partner network has grown significantly and they all have their own sales and service organizations. These good partnerships are based on our responsibilities to organize continuous sales and service training at our state of the art facilities. This direct knowledge transfer keeps our partners up-to-date and delivers a high quality service to customers around the world.

The reliable supply of spare parts.

The easiest and quickest way to find a spare part is by using your phone. In most cases, a phone call to us or one of our partners is enough to get this spare part at short notice. This is the result of a well-organized spare parts service and storage system. Thousands of spare parts are always available, even some for lifts over 30 years old!





When it comes to customer satisfaction ...

... we've got nothing to say.

We prefer to let the project speak for itself. Many customers have been equipped all over the world. One example of this is the famous Lamborghini. For this high profile Italian sports car manufacturer, we equipped their dealership in Kuwait with lifting equipment.

And also in Brussels, there are now 47 of our lifts in the BMW subsidiary opened in 2014. All lifts that were supplied were according to the customer's special design and are capable of lifting up the whole range including the modern electric cars i3 and i8.

The list will continue to grow. But in addition to the many beautiful success stories of today, there is especially a unique success story which we would like to tell you. Because we were a part of it.

Did you know ...

... how the Italian sports car manufacturer Lamborghini got its name? From the founder, Ferruccio Lamborghini. The visionary Italian created the brand in 1963 and defined the concise logo: The bull was the star sign of Ferruccio born in the 1916.

A reference in itself, the company group Senger.

Short term successes are nice, but the best reference for us has been in the making for decades! Since 1949 our company for hydraulic lifting solutions has been established. The real upturn was triggered by the commitment of Egon Senger in 1965, when he founded his company PERKUTE which later on joined forces with autop and then ended in AUTOPSTENHOJ. This development has been an important milestone for us.

This is a strong foundation. For more than 50 years Senger and autop have collaborated to form a strong partnership. A countless number of our lifts are working today in the 51 locations of the group with almost 2,500 employees.

And what else? Turn a globe and stop it at any point in any country. We are convinced that there is a high probability that you can find an AUTOPSTENHOJ lift there! Whether it is an Italian sports car dealership in Kuwait City or the branch of a German car manufacturer in Beijing. You want to get more facts? Facts and figures on many references see www.autopstenhoj.com.





We are experts not amateurs!

On the topic of the environment, AUTOPSTENHOJ has to show its true colours. There is no question about whether you act ecologically, but how far you are going with this important point. We answer this question for you when it comes to lifts by using environmentally friendly hydraulic fluid. This is our standard – no exceptions. And also – for example in Germany – you don't need to notify the installation of our hydraulic inground lifts to the official institutes. They correspond to the latest Water Management Acts. For you this means:

- You satisfy the demands of the water authority and environment agencies.
- You save extra audit fees.
- You avoid annoying questions in the building applications.
- You can rely on the recommendations of the leading car manufacturers.

Safety through high rate of tightness:

All our steel cassettes are liquid-impermeable. And this fact is certified and documented with a nameplate. This is the highest rate of tightness and comes at no extra charge. And at least for AUTOPSTENHOJ this is a standard.

Safety through double containments:

The whole hydraulic fluid chamber is located inside of the lifting equipment, which is installed in a liquid-tight cassette. This design is a double-walled construction for maximum safety and environmental compliance. If ever a leakage in the system occurs, the lift will no longer be operational within seconds. You will notice this immediately because the maximum lifting height is no longer achieved. Any leaking fluid is collected inside of the liquid-tight cassette, so no contamination will occur.

Safety through regular maintenance:

Each lift has to be checked in accordance with legal regulations. This also includes a check of cassettes structural integrity. We recommend that the hydraulic hoses are changed every six years. A commitment which we meet, for the environment and for our customers.

Maximum safety with minimum oil:

For the safe and reliable operation of our lifts we need a small amount of hydraulic fluid. Lifts with a capacity of 3.5 t need only 8 to 10 liters of hydraulic fluid. Higher capacities require a maximum of 17 liters.

Our advice for you: the simple conversion.

Your existing lifts are not filled with environmentally friendly hydraulic fluid? Let us advise you. These lifts may be converted to the ecological fluid.

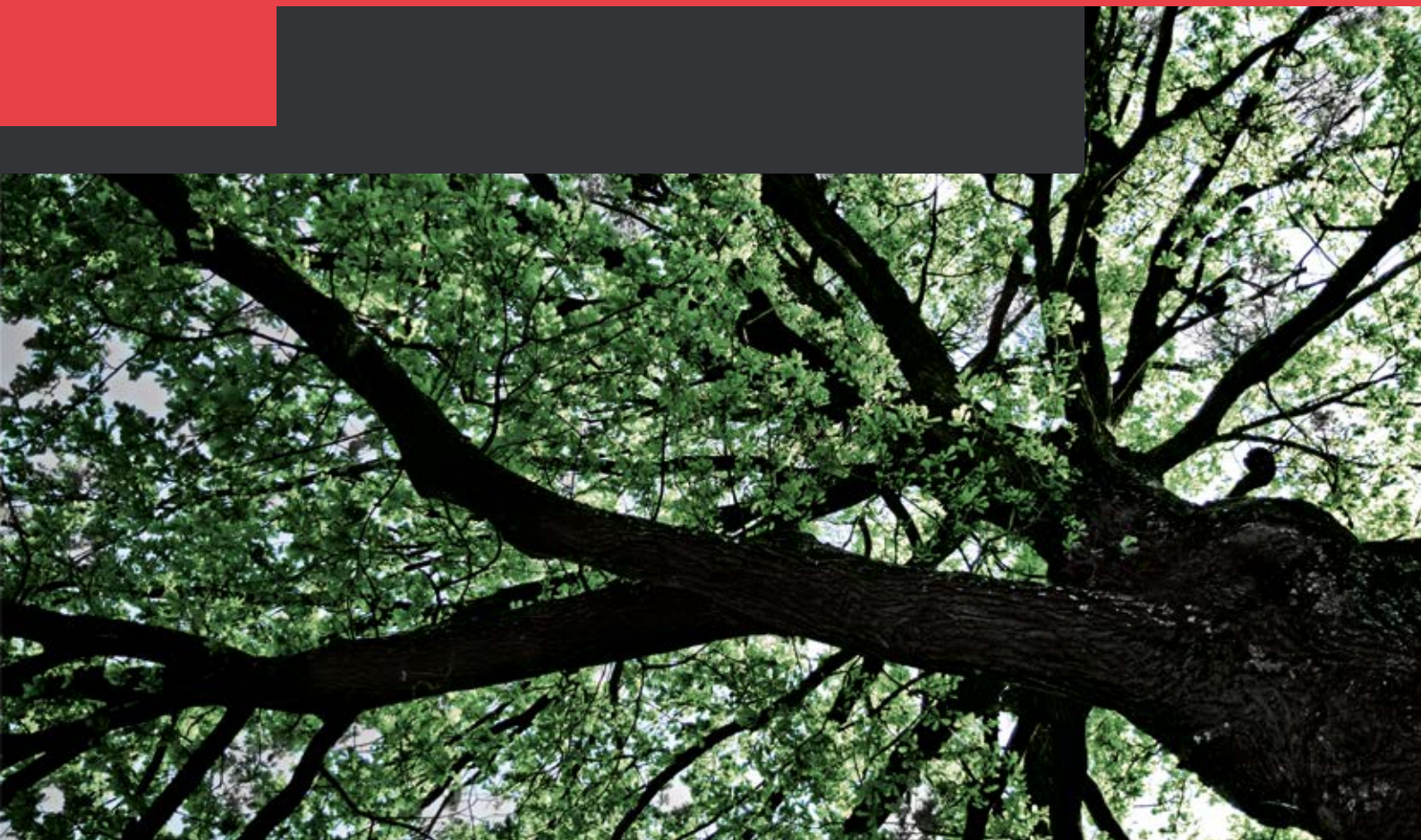

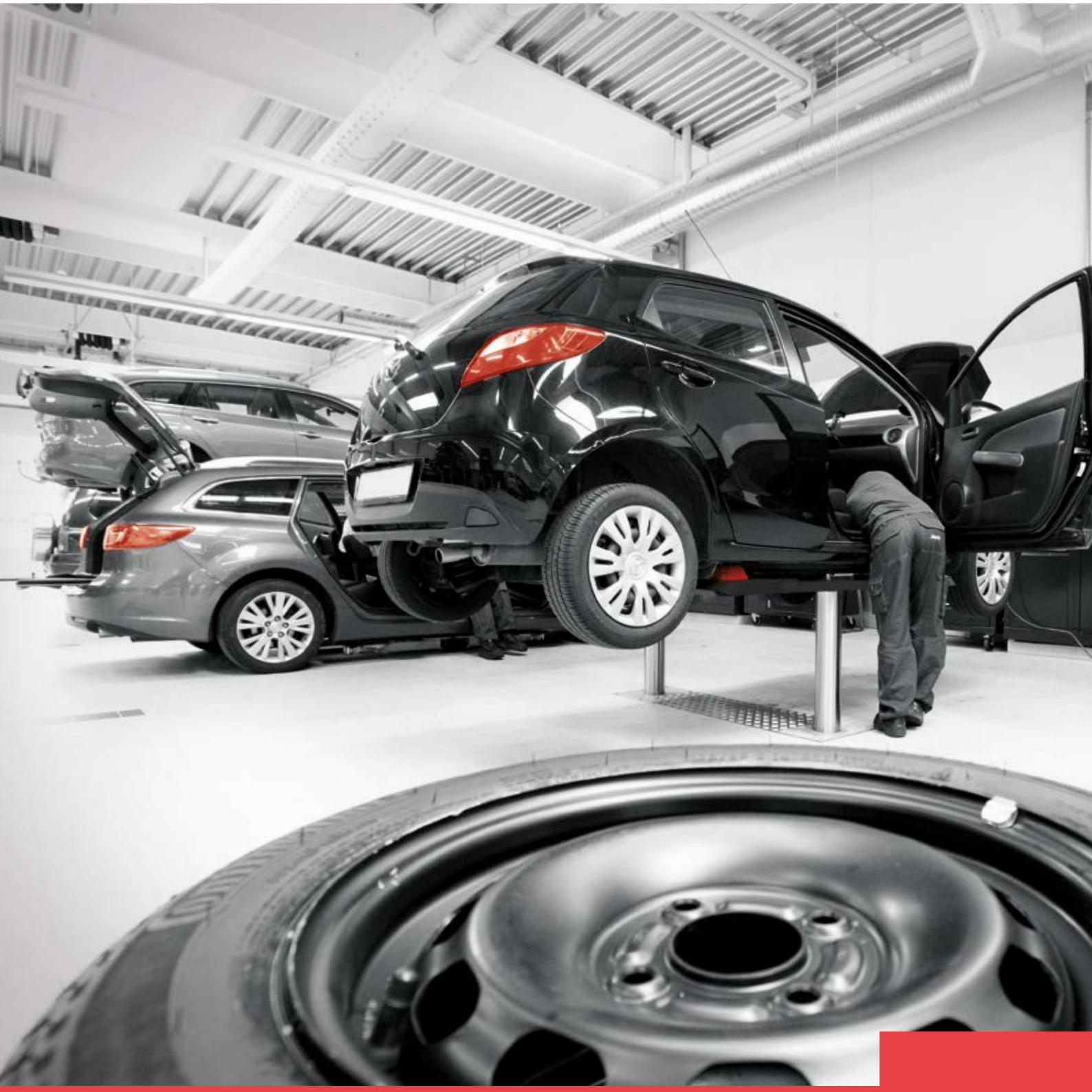

Our inground lifting technology.

Find out more:
www.autopstenhoj.com



Inground lifts

☐ **Center-ram lifts 24**
- Sololift 1.30 Fv Uni 24
- Sololift 1.35 Pv 26
- Sololoft 1.35 Sa 28
- Sololoft 1.35 Saa 30
- Mono Flex H 32
- Mono Quick 34
- Mono Drive-on 36

☐ **Twin-ram lifts..... 38**
- Eurolift 2.30 Pv 38
- Masterlift 2.30 Sav 230 40
- Masterlift 2.35 Pv 42
- Masterlift 2.35 Saav 135 Van 44
- Masterlift 2.35 Saa 46
- Masterlift 2.35 Combi Check-in - 1335 48
- Masterlift 2.35 Combi Check-in - 1550 50
- Masterlift 2.35 Combi 52
- Profilift 2.40 Fn 460 54
- Biglift 2.50/2.55 Saav 145 Jumbo 56
- Biglift 2.50 Saa 58
- Biglift 2.55 F 480 60
- Biglift 4.55 Combi 62
- Biglift 2.65 F 550 64
- Biglift 2.65 Saaa 66

☐ **4-ram lifts..... 68**
- Quattrolift 4.55 68
- Quattrolift 4.65 70



Don‘t accept compromises! Challenge us!

The cylinder of your lift should be plated with a minimum 30 microns of chrome.

Each cylinder is mechanically processed and hard chrome plated by ourselves. And this with a minimum of 30 microns, which is very important for AUTOPSTENHOJ standards. The guides are manufactured using a special alloy, which is absolutely corrosion resistant. The synchronization device is flexible. Thus we have nearly no wearing and the lifting of the cylinders is operated with minimal friction. An additinal extra is always included: The power unit is equipped with an additional oil filter. An important device to ensure a very long lifetime. And this is only one of many arguments when comparing inground lifts from AUTOPSTENHOJ to others.

Convincing facts.

- ☐ Space saving
- ☐ More lifts per workshop = more profit
- ☐ Perfect freedom of movement
- ☐ Satisfied employees
- ☐ Retro-fit kits for other superstructures
- ☐ Wide range of accessories
- ☐ High rate of planning certainty
- ☐ Extremely low maintenance
- ☐ Long lifetime

Even more advantages in a few words.

- ☐ Designed and manufactured according to EN 1493
- ☐ Spraying or galvanizing
- ☐ Alarm signal

You can only promise once. But you can guarantee twice!

After the delivery of your lift you have an all round warranty of two years. This not only applies to the main components, but also to the high pressure seal, the cylinder bearing and synchronization/safety device.

A combination of perfect advantages.

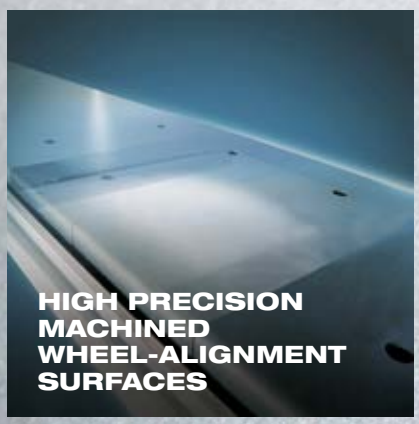







UNIQUE
ANTI CORROSION
PROTECTION

PROGRAMMABLE
CONTROL UNIT
WITH ALARM SIGNAL











Unique solutions for all possibilities.

Our offer includes electro-hydraulic inground lifts with 1 - 4 rams. The load capacity is from 3.0 up to 6.5 tons. We cover all applications: from the check-in area to the mechanical workshop, as well as body repair, diagnostic and car care. And this also includes customized solutions. Our range of swivel arm lifts with the various accessories ensures professional lifting of the ever-growing range of car models from the different car manufacturers. The answer to a huge diversity of cars is a complexity of ideas.

A lift speaks more than a thousand words: The designation and what it means.

Each type of an AUTOPSTENHOJ inground lift has a clear designation. The few letters and numbers contain an important information for you. Here is what they mean:



Direct reception: Perfect solution for your customer.

- We are the pioneers of the direct reception concept since the early 1970s.
- Shows problems and solutions directly on the car - as a confidence building measure.
- Uses the pleasant ambience to communicate openly about solutions and cost.
- Uses the direct contact to attract attention to other promotions and offers.

Repair and maintenance: Everything can be managed as it should.

- Use the optimal working conditions for all workstations.

Diagnosis: It is worth taking a closer look.

- Create a well planned space corresponding to the complexity of functional tests and CE approvals.

Body work: A benefit, not only for accident damaged cars.

- Take advantage of the free access to all vehicle levels.
- Use your straightening bench without any problems.

Car care: Shining for a long period.

- Rely on our perfect splash water and corrosion protection for a long life of your lift.

Technical data	
Lifting capacity	3,000 kg
Lifting height	1,780 mm
Working height	1,800 mm
Cylinder diameter	123 mm
Lifting / lowering time	app. 30 sec.
Foundation depth	2,400 mm
Pump unit	3.0 kW
Ecological hydraulic fluid	12 l
Voltage	230/400 V - 50 Hz -16 A

Fv Uni superstructure	
Total length	4,656 mm
Wheel base, min. - max.	1,600 - 3,900 mm
Total width	1,050 / 2,108 mm
Min. height	20 / 80 mm

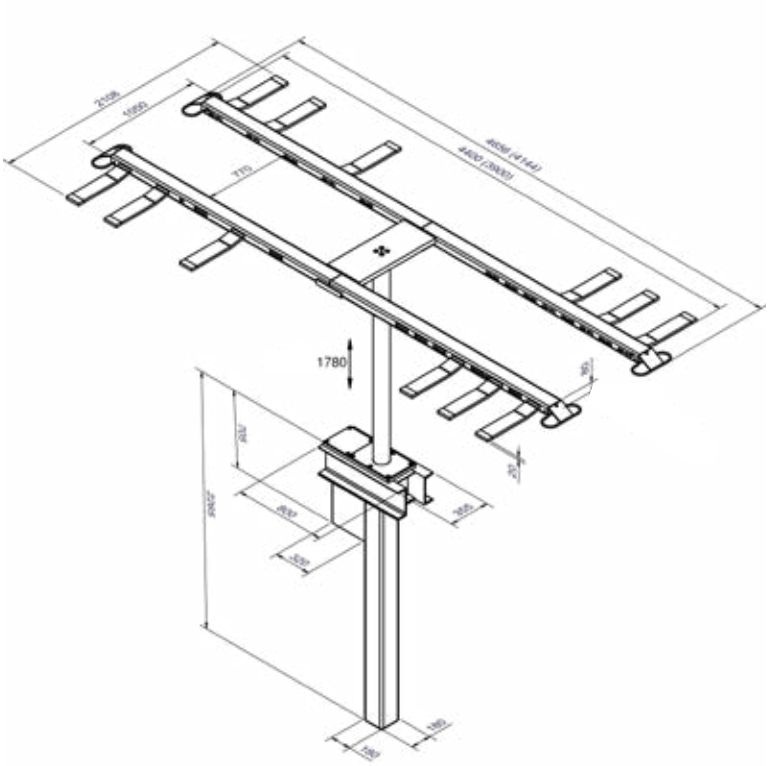

Scan the QR-Code for detailed product information.

Further Information on www.autopstenhoj.com

Versions:

Steel cassette:
- ☐ Zinc-coated
- ☐ Coated

Installation:
- ☐ Superstructure on floor
- ☐ Ceiling installation
- ☐ Hydraulic pump unit in floor
- ☐ Hydraulic pump unit on wall

Optional extras:

- ☐ Extra lifting blades

Special colours available on request!



Application

- ☐ Check-in
- ☐ Car wash
- ☐ Repair and maintenance

Approvals

- ☐ BMW / Mini

Sololift 1.30 Fv Uni

Electro-hydraulic single-ram lift, 3 t capacity, superstructure with lifting blades

Description:

Steel cassette:
- ☐ Waterproof steel cassette
- ☐ Self-carrying

Hydraulic unit:
- ☐ Hard-chrome plated cylinder
- ☐ Integrated anti-rotation device
- ☐ Corrosion-free guiding elements
- ☐ Hydraulic unit with immersed motor for fitting on wall
- ☐ Ecological hydraulic fluid
- ☐ Pneumatic emergency lowering
- ☐ Pushbutton control unit

Superstructure:
- ☐ Superstructure with lifting blades on floor
- ☐ Adaptation to various wheel bases by re-positioning of lifting blades
- ☐ Low minimum height

Standard colours
- ☐ Zinc-coated

Illustrations are not binding and optional. Under reserve of dimensional, constructional and technical modifications! Validity 07/2016

Technical data	
Lifting capacity	3,500 kg
Lifting height	1,780 mm
Working height	1,845 mm + Rubber pads
Cylinder diameter	123 mm
Lifting / lowering time	app. 30 Sec.
Foundation depth	2,400 mm
Pump unit	3.0 kW
Ecological hydraulic fluid	12 l
Voltage	230/400 V - 50 Hz - 16 A

Pv superstructure	
Total length min. - max.	120-180: app. 1,200 - 1,800 mm 140-200: app. 1,400 - 2,000 mm 160-220: app. 1,600 - 2,200 mm 170-240: app. 1,700 - 2,400 mm
Min. height	65 mm

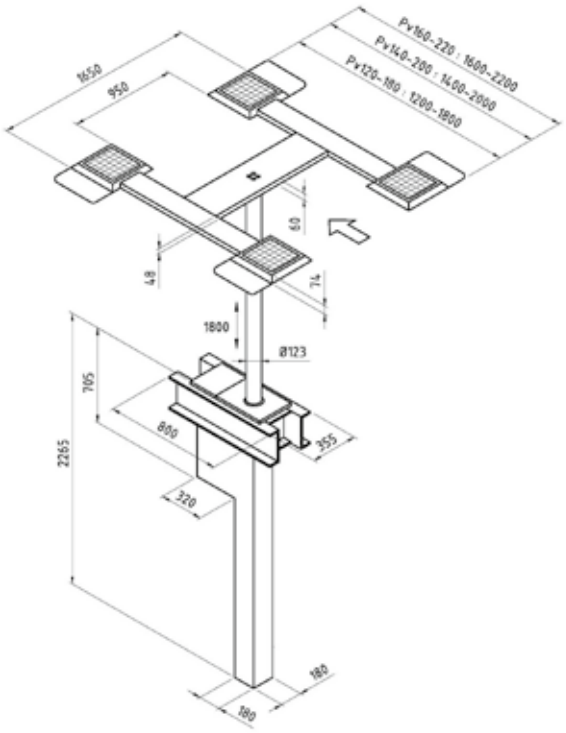

Scan the QR-Code for detailed product information.

Further Information on www.autopstenhoj.com

Versions:

Steel cassette:
- ☐ Zinc-coated
- ☐ Coated

Installation:
- ☐ Superstructure on floor
- ☐ Superstructure in floor with alarm signal (140-200 & 160-220)
- ☐ Ceiling installation
- ☐ Hydraulic pump unit in floor
- ☐ Hydraulic pump unit on wall

Optional extras:

- ☐ XY-pads
- ☐ Sets of rubber blocks, 40, 60, 80 and 100 mm

Special colours available on request!



Application

- ☐ Check-in
- ☐ Car wash
- ☐ Repair and maintenance
- ☐ Testing equipment

Approvals

- ☐ All models: Renault
- ☐ SL 1.35 Pv 170-240: BMW / Mini
- ☐ SL 1.35 Pv 160-220xy: Volkswagen Group
- ☐ SL 1.35 Pv 140-200: Opel



Sololift 1.35 Pv

Electro-hydraulic single-ram lift, 3.5 t capacity, flat supports

Description:

Steel cassette:
- ☐ Waterproof steel cassette
- ☐ Self-carrying

Hydraulic unit:
- ☐ Hard-chrome plated cylinder
- ☐ Integrated anti-rotation device
- ☐ Corrosion-free guiding elements
- ☐ Hydraulic unit with immersed motor for fitting on wall
- ☐ Ecological hydraulic fluid
- ☐ Pneumatic emergency lowering
- ☐ Pushbutton control unit

Superstructure:
- ☐ Lifting supports in different lengths (120-180, 140-200, 160-220 & 170 - 240)
- ☐ Rubber-coated, non-skid pads
- ☐ Low minimum height

Standard colours
- ☐ Zinc-coated and painted in RAL 7016

Illustrations are not binding and optional. Under reserve of dimensional, constructional and technical modifications! Validity 07/2016

Technical data	
Lifting capacity	3,500 kg
Lifting height	1,780 mm
Working height	1,920 - 1,980 mm
Cylinder diameter	123 mm
Lifting / lowering time	app. 30 Sec.
Foundation depth	2,400 mm
Pump unit	3.0 kW
Ecological hydraulic fluid	12 l
Voltage	230/400 V - 50 Hz - 16 A

Arm superstructure	
Lifting pad included in the delivery	11028 (135 - 195 mm)
Min. height	135 - 195 mm
Arm length, min. - max.	665 - 1,055 mm

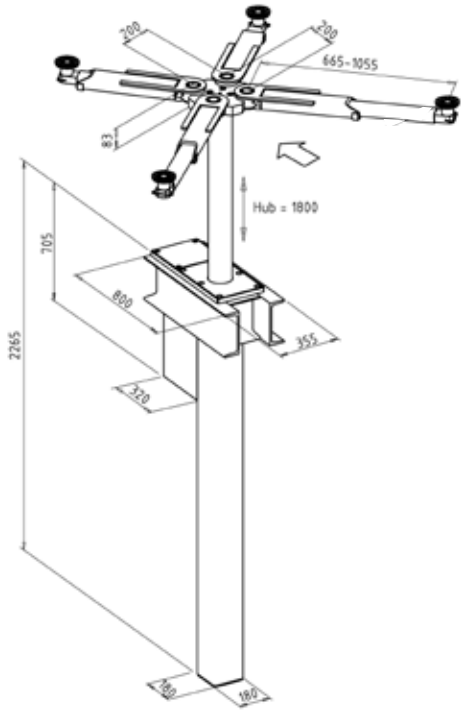

Scan the QR-Code for detailed product information.

Further Information on www.autopstenhoj.com

Versions:

Steel cassette:
- ☐ Zinc-coated
- ☐ Coated

Installation:
- ☐ Superstructure on floor
- ☐ Ceiling installation
- ☐ Hydraulic pump unit in floor
- ☐ Hydraulic pump unit on wall

Optional extras:

- ☐ Large program of extra pads

Special colours available on request!



Application

- ☐ Car wash
- ☐ Repair and maintenance
- ☐ Body work

Approvals

- ☐ Renault
- ☐ Volkswagen Group



Sololift 1.35 Sa

Electro-hydraulic single-ram lift, 3.5 t capacity, superstructure with arms

Description:

Steel cassette:
- ☐ Waterproof steel cassette
- ☐ Self-carrying

Hydraulic unit:
- ☐ Hard-chrome plated cylinder
- ☐ Integrated anti-rotation device
- ☐ Corrosion-free guiding elements
- ☐ Hydraulic unit with immersed motor for fitting in floor
- ☐ Ecological hydraulic fluid
- ☐ Pneumatic emergency lowering
- ☐ Pushbutton control unit

Superstructure:
- ☐ Single telescopic arms
- ☐ Internal arm locking system
- ☐ Low minimum height

Standard colours
- ☐ Base plate: Grey RAL 7016
- ☐ Arms: Red RAL 3020

Illustrations are not binding and optional. Under reserve of dimensional, constructional and technical modifications! Validity 07/2016

Technical data	
Lifting capacity	3,500 kg
Lifting height	1,780 m
Working height	1,875 - 1,925 mm
Cylinder diameter	123 mm
Lifting / lowering time	app. 30 Sec.
Foundation depth	2,400 mm
Pump unit	3.0 kW
Ecological hydraulic fluid	12 l
Voltage	230/400 V - 50 Hz - 16 A

Arm superstructure	
Min. height	95 - 145 mm
Arm length, min. - max.	595 - 1,220 mm

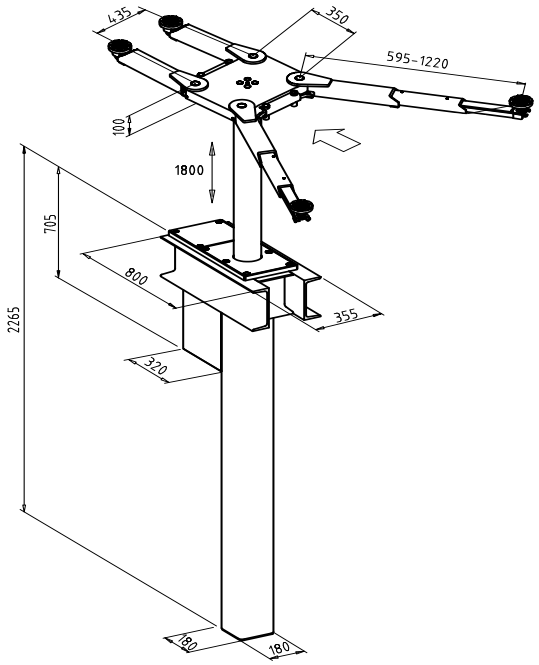

Scan the QR-Code for detailed product information.

Further Information on www.autopstenhoj.com

Versions:

Steel cassette:
- ☐ Zinc-coated
- ☐ Coated

Installation:
- ☐ Superstructure on floor
- ☐ Ceiling installation
- ☐ Hydraulic pump unit in floor
- ☐ Hydraulic pump unit on wall

Optional extras:

- ☐ Large program of extra pads

Special colours available on request!

Application

- ☐ Car wash
- ☐ Repair and maintenance
- ☐ Body work





Sololift 1.35 Saa

Electro-hydraulic single-ram lift, 3.5 t capacity, superstructure with arms

Description:

Steel cassette:
- ☐ Waterproof steel cassette
- ☐ Self-carrying

Hydraulic unit:
- ☐ Hard-chrome plated cylinder
- ☐ Integrated anti-rotation device
- ☐ Corrosion-free guiding elements
- ☐ Hydraulic unit with immersed motor for fitting in floor
- ☐ Ecological hydraulic fluid
- ☐ Pneumatic emergency lowering
- ☐ Pushbutton control unit

Superstructure:
- ☐ Double telescopic arms
- ☐ Internal arm locking system
- ☐ Low minimum height

Standard colours
- ☐ Base plate: Grey RAL 7016
- ☐ Arms: Red RAL 3020

Illustrations are not binding and optional. Under reserve of dimensional, constructional and technical modifications! Validity 07/2016

Technical data	
Lifting capacity	3,000 kg
Lifting height	1,750 mm
Cylinder diameter	238 mm
Lifting / lowering time	35 Sec.
Foundation depth	2,600 mm
Ecological hydraulic fluid	High pressure: 8/40 l Semi-hydraulic: 140 l
Nessesary constant air pressure	10 bar

Arm superstructure	
Min. height	100 mm
Arm length, min. - max. min./max.	645 / 1,040 mm 720 / 1,070 mm 835 / 1,395 mm 910 / 1,400 mm

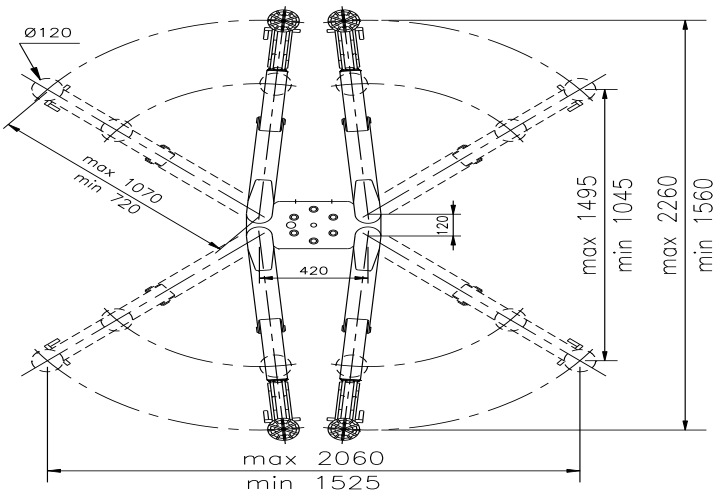

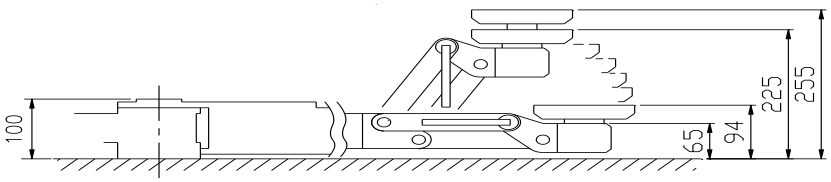

Scan the QR-Code for detailed product information.

Further Information on www.autopstenhoj.com

Versions:

- ☐ Mono Flex H 30 S (645/1,040 mm)
- ☐ Mono Flex H 30 CF (720/1,070 mm)
- ☐ Mono Flex H 30 CF VAN (720/1,070 mm)
- ☐ Mono Flex H 30 CF VAN L (830/1,395 mm)
- ☐ Special version: Mono Flex H 20 CF CAMP (910/1,400 mm) 2,000 kg capacity for lifting caravans

Installation:
- ☐ S = screw pad
- ☐ CF = combiflex pad

Optional extras:

- ☐ Safety leg
- ☐ Installation frame
- ☐ Extra pads for CF-models
- ☐ Protection bag

Special colours available on request!

Application

- ☐ Car wash
- ☐ Repair and maintenance
- ☐ Body work



Mono Flex H 30

High pressure and semi-hydraulic lifts, 3 t capacity

Description:

- ☐ Hard-chrome plated cylinder
- ☐ 4 different arm lengths
- ☐ Single telescopic arms
- ☐ 3 different base plates
- ☐ Semi-hydraulic with manouvering valve
- ☐ High pressure for either single or central operation (up to 6 lifts)
- ☐ Automatic arm locking system
- ☐ Available with anti-rotation device
- ☐ Available with pilot valve

Standard colours

- ☐ Base plate: Grey RAL 7016
- ☐ Arms: Red RAL 3020

Illustrations are not binding and optional. Under reserve of dimensional, constructional and technical modifications! Validity 07/2016

Technical data	
Lifting capacity	3,000 kg
Lifting height	1,750 mm
Cylinder diameter	238 mm
Lifting / lowering time	35 Sec.
Foundation depth	2,600 mm
Ecological hydraulic fluid	High pressure: 8/40 l Semi-hydraulic: 140 l

Pv superstructure	
Min. height	79 mm
Total width	1,676 mm
Total length	1,836 mm

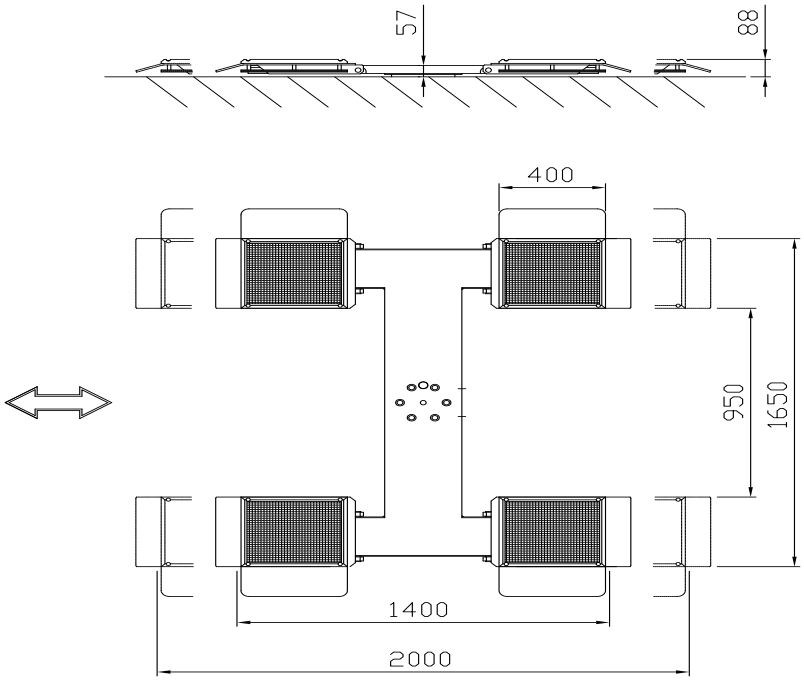

Scan the QR-Code for detailed product information.

Further Information on www.autopstenhoj.com

Versions:

- ☐ Superstructure 1,400-2,000 mm adjustability lengthwise

Optional extras:

- ☐ Safety leg
- ☐ Installation frame
- ☐ XY-pads
- ☐ Rubber pads

Special colours available on request!



Application

- ☐ Repair and maintenance

Mono Quick 30

High pressure and semi-hydraulic lifts, 3 t capacity

Description:

- ☐ Hard-chrome plated cylinder
- ☐ Adjustable H-shaped superstructure
- ☐ SkidproofRubber pads
- ☐ Semi-hydraulic with manouvering valve
- ☐ High pressure for either single or central operation (up to 6 lifts)
- ☐ Available with anti-rotation device
- ☐ Available with pilot valve

Standard colours

- ☐ Grey RAL 7016

Illustrations are not binding and optional. Under reserve of dimensional, constructional and technical modifications! Validity 07/2016

Technical data	
Lifting capacity	3,000 kg
Lifting height	1,750 mm
Cylinder diameter	238 mm
Lifting / lowering time	35 Sec.
Foundation depth	2,600 mm
Ecological hydraulic fluid	High pressure: 8/40 l Semi-hydraulic: 140 l
Nessesary constant air pressure	10 bar

Platforms	
Min. height	194 mm
Total width	variabel
Total length	5,086 mm
Platfrom length	4,180 mm
Usable legth of platform	4,180 mm
Platform width	500 mm
Distance between platforms	902 mm
Wheel base	variable

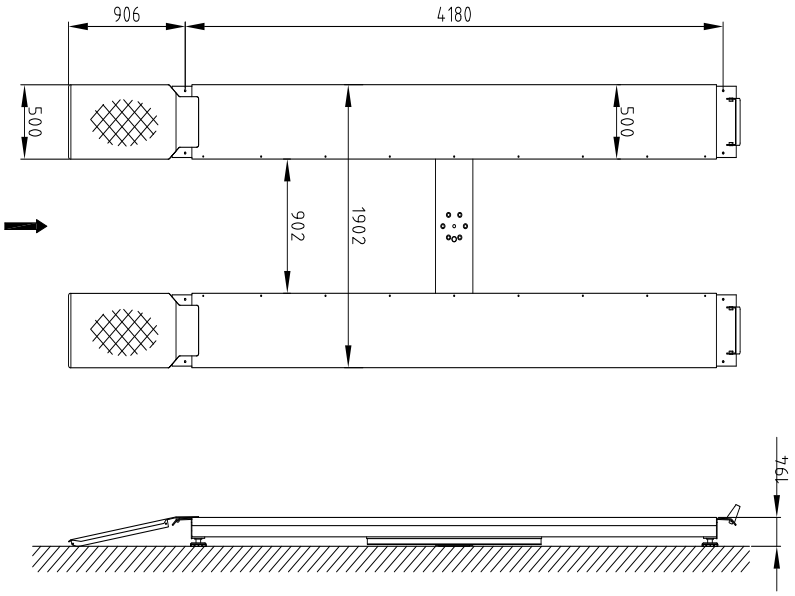

Scan the QR-Code for detailed product information.

Further Information on www.autopstenhoj.com

Versions:

- ☐ A = flush platforms
- ☐ Drive-on ramps and stops

Optional extras:

- ☐ Safety leg
- ☐ Installation frame
- ☐ Scissor jack
- ☐ Protection bag
- ☐ Set of two 1,300 mm drive-on ramps

Special colours available on request!

Application

- ☐ Repair and maintenance

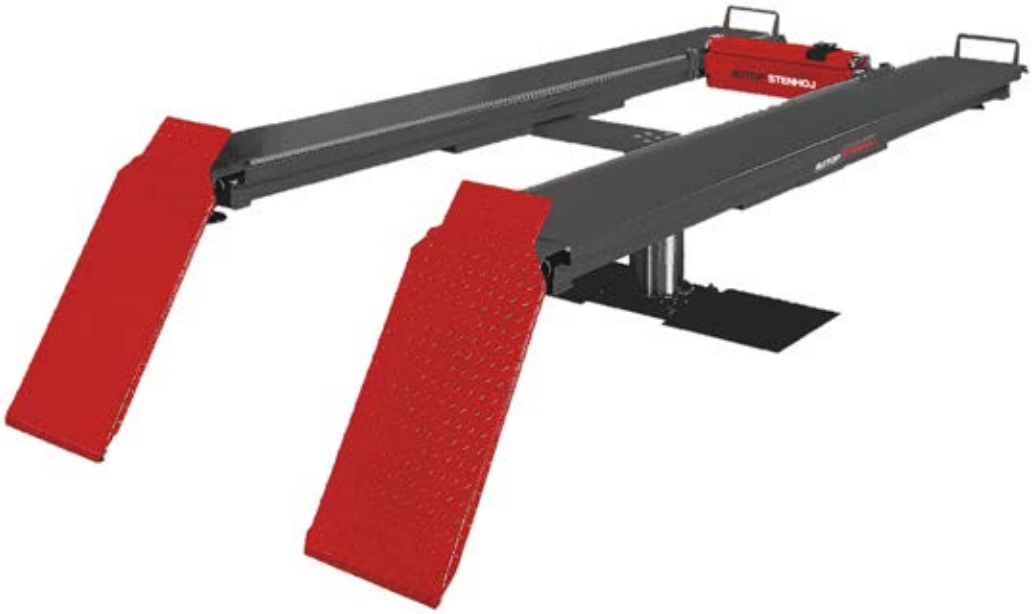

Mono Drive-On

High pressure and semi-hydraulic lifts, 3 t capacity

Description:

- ☐ Hard-chrome plated cylinder
- ☐ 4,180 mm flush platforms
- ☐ 900 mm drive-on ramps
- ☐ Semi-hydraulic with manouvering valve
- ☐ High pressure for either single or central operation (up to 6 lifts)
- ☐ Available with anti-rotation device
- ☐ Available with pilot valve

Standard colours

- ☐ Platforms: Grey RAL 7016
- ☐ Ramps: Red RAL 3020

Illustrations are not binding and optional. Under reserve of dimensional, constructional and technical modifications! Validity 07/2016

Technical data	
Lifting capacity	3,000 kg
Lifting height	1,950 mm
Working height	2,015 mm + Rubber pads
Cylinder diameter	2 x 123 mm
Distance between cylinders	1,335 mm
Lifting / lowering time	app. 30 Sec.
Foundation depth	2,625 mm
Pump unit	3.0 kW
Ecological hydraulic fluid	10 l
Voltage	230/400 V - 50 Hz - 16 A

Pv superstructure	
Total length min. - max.	120-180: app. 1,200 - 1,800 mm 140-200: app. 1,400 - 2,000 mm 160-220: app. 1,600 - 2,200 mm 170-240: app. 1,700 - 2,400 mm
Min. height	65 mm

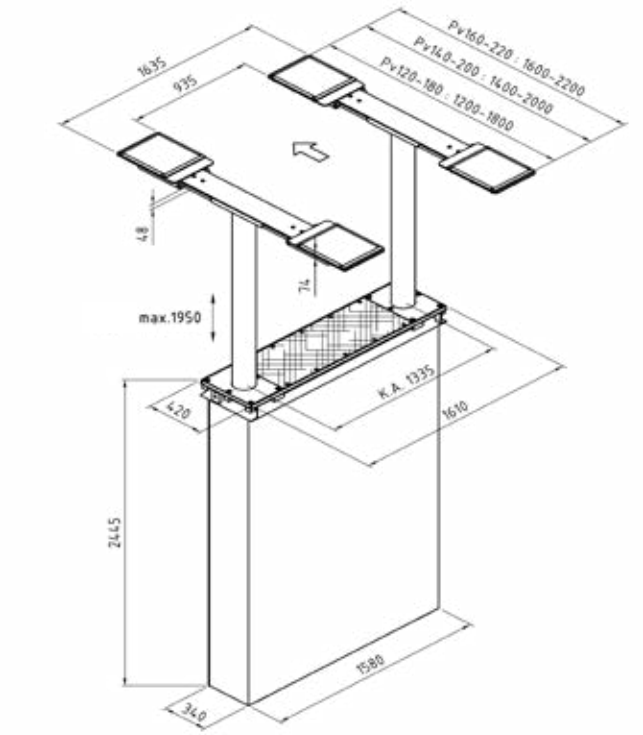

Scan the QR-Code for detailed product information.

Further Information on www.autopstenhoj.com

Versions:

Steel cassette:
- ☐ Zinc-coated
- ☐ Coated
- ☐ Self-carrying

Installation:
- ☐ Superstructure on floor
- ☐ Superstructure in floor
- ☐ Ceiling installation

Optional extras:

- ☐ XY-pads
- ☐ Sets of rubber blocks, 40, 60, 80 and 100 mm

Special colours available on request!

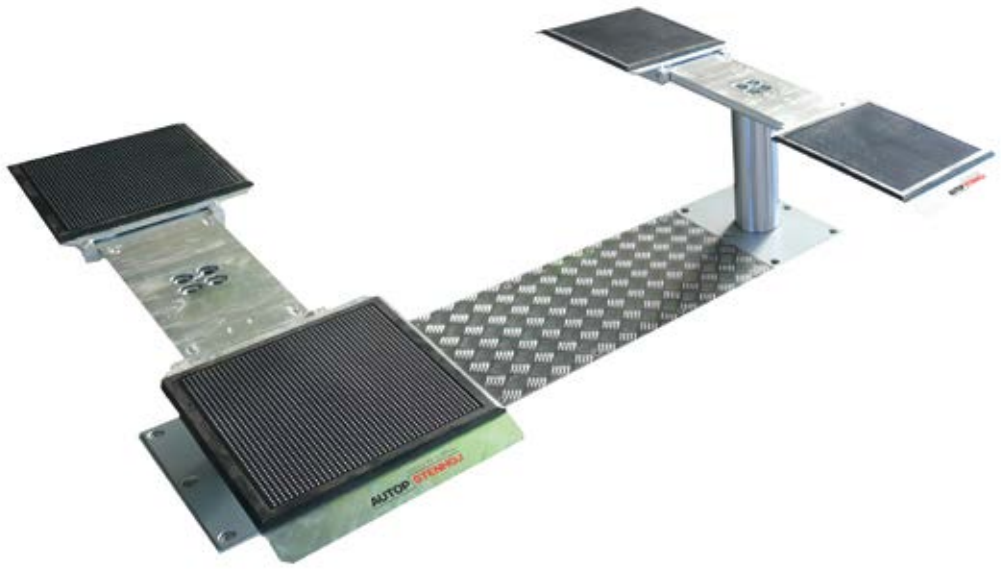

Application

- ☐ Check-in
- ☐ Car wash
- ☐ Repair and maintenance
- ☐ Testing equipment

Approvals

- ☐ Jaguar
- ☐ Volvo

Eurolift 2.30 Pv

Electro-hydraulic twin-ram lift, 3 t capacity, superstructure with flat lifting supports

Description:

Steel cassette:
- ☐ Waterproof steel cassette

Hydraulic unit:
- ☐ Hard-chrome plated cylinder
- ☐ Integrated anti-rotation device
- ☐ Corrosion-free guiding elements
- ☐ Hydraulic unit with immersed motor for fitting on wall
- ☐ Non-hazardous hydraulic oil
- ☐ Pneumatic emergency lowering
- ☐ Programmable pushbutton control unit

Superstructure:
- ☐ Stable lifting supports, lengthwise adjustable (140-200, 160-220), lengthwise adjustable
- ☐ Rubber-coated, non-skid pads
- ☐ Low minimum height

Standard colours
- ☐ Zinc-coated

Illustrations are not binding and optional. Under reserve of dimensional, constructional and technical modifications! Validity 07/2016

Technical data	
Lifting capacity	3,000 kg
Lifting height	1,950 mm
Working height	2,080 mm - 2.130 mm
Cylinder diameter	2 x 123 mm
Distance between cylinders	2,285 mm
Lifting / lowering time	app. 30 Sec.
Foundation depth	2,625 mm
Pump unit	3.0 kW
Ecological hydraulic fluid	10 l
Voltage	230/400 V - 50 Hz - 16 A

Arm superstructure	
Total width	2,620 mm
Lifting pad included in the delivery	11033 (125 - 175 mm)
Min. height	125 - 175 mm
Drive-through width	2,050 mm
Arm length, min. - max.	550 - 845 mm

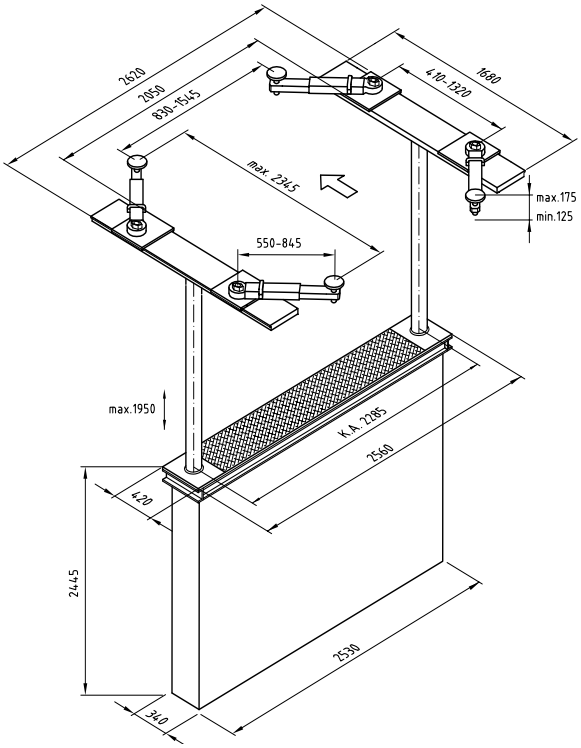

Scan the QR-Code for detailed product information.

Further Information on www.autopstenhoj.com

Versions:

Steel cassette:
- ☐ Zinc-coated
- ☐ Coated
- ☐ Self-carrying

Installation:
- ☐ Superstructure on floor
- ☐ Ceiling installation

Optional extras:

- ☐ Large program of extra pads

Special colours available on request!

Application

- ☐ Repair and maintenance
- ☐ Body work

Approvals

- ☐ Opel
- ☐ Volkswagen Group



Masterlift 2.30 Sav 230

Electro-hydraulic twin-ram lift, 3 t capacity, superstructure with adjustable arms

Description:

Steel cassette:
- ☐ Waterproof steel cassette

Hydraulic unit:
- ☐ Hard-chrome plated cylinder
- ☐ Flexible synchronization and safety system
- ☐ Corrosion-free guiding elements
- ☐ Pump unit with immersed motor
- ☐ Ecological hydraulic fluid
- ☐ Pneumatic emergency lowering
- ☐ Programmable pushbutton control unit

Superstructure:
- ☐ Single telescopic arms
- ☐ Simple arm locking system
- ☐ Low minimum height

Standard colours
- ☐ Base plate: Grey RAL 7016
- ☐ Arms: Red RAL 3020

Illustrations are not binding and optional. Under reserve of dimensional, constructional and technical modifications! Validity 07/2016

Technical data	
Lifting capacity	3,500 kg
Lifting height	1,950 mm
Working height	2,015 mm + Rubber pads
Cylinder diameter	2 x 123 mm
Distance between cylinders	1,335 mm
Lifting / lowering time	app. 30 Sec.
Foundation depth	2,625 mm
Pump unit	3.0 kW
Ecological hydraulic fluid	10 l
Voltage	230/400 V - 50 Hz - 16 A

Pv superstructure	
Total width min. - max.	120 - 180: app. 1,200 - 1,800 mm 140 - 200: app. 1,400 - 2,000 mm 160 - 220: app. 1,600 - 2,200 mm 170 - 240: app. 1,700 - 2,400 mm
Min. height	65 mm

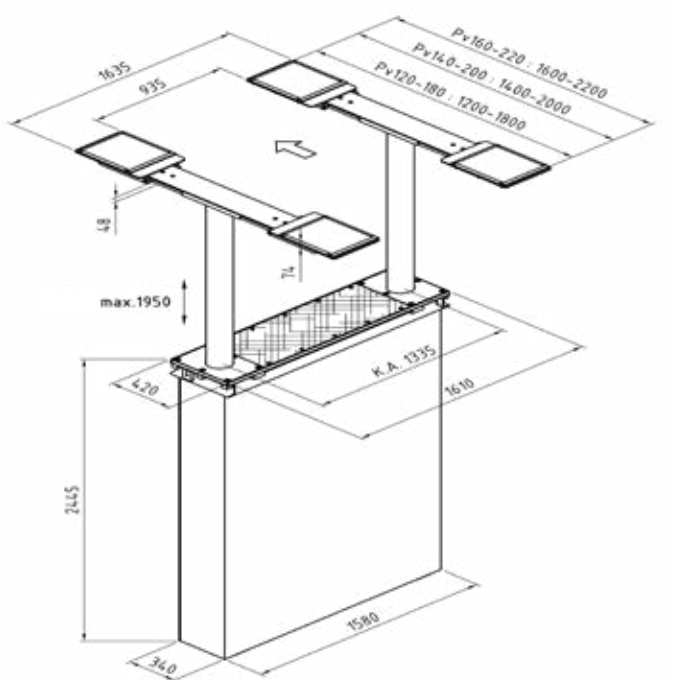

Scan the QR-Code for detailed product information.

Further Information on www.autopstenhoj.com

Versions:

Steel cassette:
- ☐ Zinc-coated
- ☐ Coated
- ☐ Self-carrying

Superstructure:
- ☐ Lifting supports in different lengths (120-180, 140-200, 160-220 & 170-240)
- ☐ Pv Standard: Zinc-coated
- ☐ Pv Premium: zink coated and painted

Installation:
- ☐ Superstructure on floor
- ☐ Superstructure in floor (für 140-200 & 160-220)
- ☐ Ceiling installation

Optional extras:

- ☐ XY-pads
- ☐ Sets of rubber blocks, 40, 60, 80 and 100 mm

Special colours available on request!

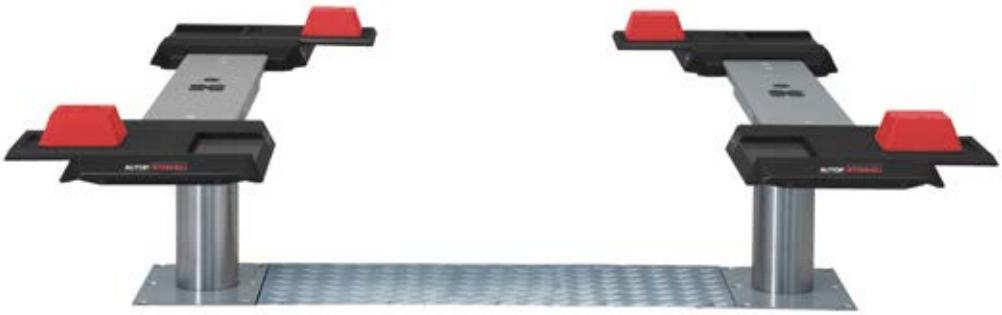

Application

- ☐ Check-in
- ☐ Car wash
- ☐ Repair and maintenance
- ☐ Testing equipment

Approvals

- ☐ All models:
  Renault
- ☐ ML 2.35 Pv 140-200:
  Opel
- ☐ ML 2.35 Pv 160-220 xy:
  Mercedes-Benz,
  Volkswagen Group
- ☐ ML 2.35 Pv 170-240:
  BMW / Mini



Masterlift 2.35 Pv

Electro-hydraulic twin-ram lift, 3.5 t, superstructure with flat lifting supports

Description:

Steel cassette:
- ☐ Waterproof steel cassette

Hydraulic unit:
- ☐ Hard-chrome plated cylinder
- ☐ Flexible synchronization and safety system
- ☐ Corrosion-free guiding elements
- ☐ Pump unit with immersed motor
- ☐ Ecological hydraulic fluid
- ☐ Pneumatic emergency lowering
- ☐ Programmable pushbutton control unit

Superstructure:
- ☐ Stable lifting supports, lengthwise adjustable
- ☐ Rubber-coated, non-skid pads
- ☐ Low minimum height

Standard colours
- ☐ Pv Premium: zink coated and painted RAL 7016

Illustrations are not binding and optional. Under reserve of dimensional, constructional and technical modifications! Validity 07/2016

Technical data	
Lifting capacity	3,500 kg
Lifting height	1,950 mm
Working height	2,020 – 2,085 mm
Cylinder diameter	2 x 123 mm
Distance between cylinders	1,335 mm
Lifting / lowering time	app. 30 Sec.
Foundation depth	2,625 mm
Pump unit	3.0 kW
Ecological hydraulic fluid	10 l
Voltage	230/400 V - 50 Hz - 16 A

Arm superstructure	
Total width	3,210 mm
Lifting pad included in the delivery	Uni: 11027 (95 - 135 mm) Sport: 29265 (70 - 95 mm)
Min. height	Uni: 95 - 135 mm Sport: 70 - 95 mm
Arm length, min. - max.	710 - 1,443 mm

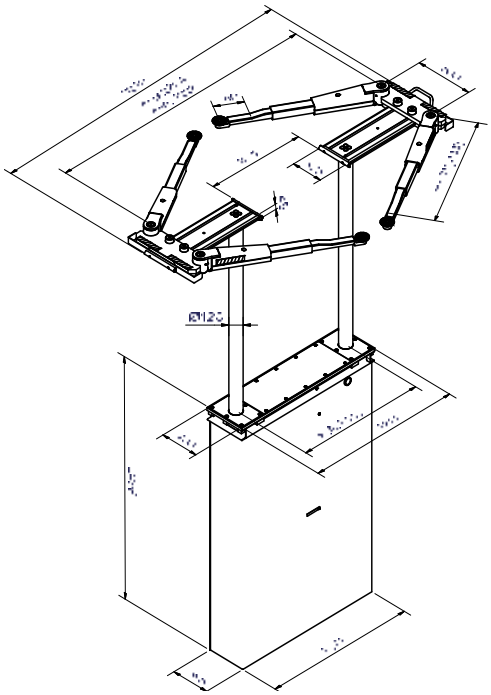

Scan the QR-Code for detailed product information.

Further Information on www.autopstenhoj.com

Versions:

Steel cassette:
- ☐ Zinc-coated
- ☐ Coated
- ☐ Self-carrying

Installation:
- ☐ Superstructure on floor
- ☐ Ceiling installation

Versions:
- ☐ Sport & Universal versions

Optional extras:

- ☐ Large program of extra pads

Special colours available on request!



Application

- Repair and maintenance

Approvals

- Jaguar
- Opel
- Renault
- Volkswagen Group
- ML 2.35 Saav Van Universal: Mercedes-Benz



Masterlift 2.35 Saav 135 Van

Electro-hydraulic twin-ram lift, 3.5 t capacity, superstructure with adjustable arms

Description:

Steel cassette:
- Waterproof steel cassette

Hydraulic unit:
- Hard-chrome plated cylinder
- Flexible synchronization and safety system
- Corrosion-free guiding elements
- Pump unit with immersed motor
- Ecological hydraulic fluid
- Pneumatic emergency lowering
- Programmable pushbutton control unit

Superstructure:
- Double-telescopic arms
- Internal arm locking system
- Low minimum height

Standard colours
- Base plate: Grey RAL 7016
- Arms and slider: Red RAL 3020

Illustrations are not binding and optional. Under reserve of dimensional, constructional and technical modifications! Validity 07/2016

Technical data	
Lifting capacity	3,500 kg
Lifting height	1,950 mm
Working height	2,020 - 2,085 mm
Cylinder diameter	Saa 230: 2 x 123 mm Saa 260: 2 x 140 mm
Distance between cylinders	Saa 230: 2,285 mm Saa 260: 2,600 mm
Lifting / lowering time	app. 30 Sec.
Foundation depth	2,625 mm
Pump unit	3.0 kW
Ecological hydraulic fluid	10 l
Voltage	230/400 V - 50 Hz - 16 A

Arm superstructure	
Total width	3,000 mm
Lifting pad included in the delivery	Uni: 11027 (95 - 135 mm) Sport: 29265 (70 - 95 mm)
Min. height	Uni: 95 - 135 mm Sport: 70 - 95 mm
Drive-through width	Saa 230: 2,160 mm Saa 260: 2,455 mm
Arm length, min. - max.	658 - 1,313 mm

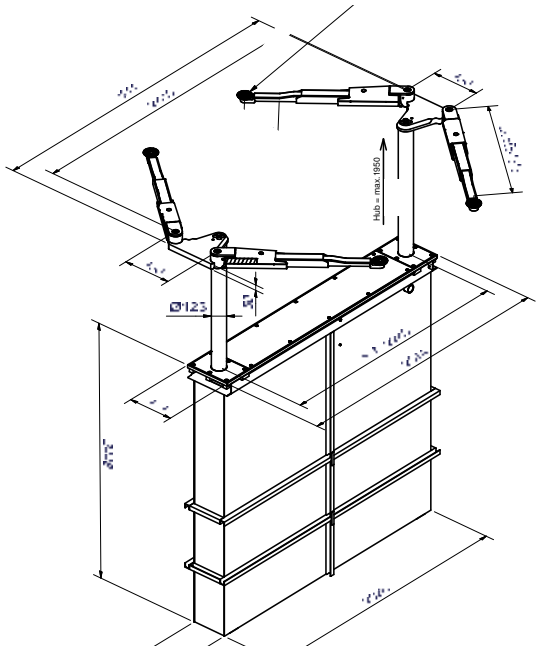

Scan the QR-Code for detailed product information.

Further Information on www.autopstenhoj.com

Versions:

Steel cassette:
- ☐ Zinc-coated
- ☐ Coated
- ☐ Self-carrying

Installation:
- ☐ Superstructure on floor
- ☐ Superstructure in floor (Saa 230)
- ☐ Ceiling installation

Versions:
- ☐ Saa 230 & Saa 260 also available as Sport & Universal versions

Optional extras:

- ☐ Large program of extra pads

Special colours available on request!

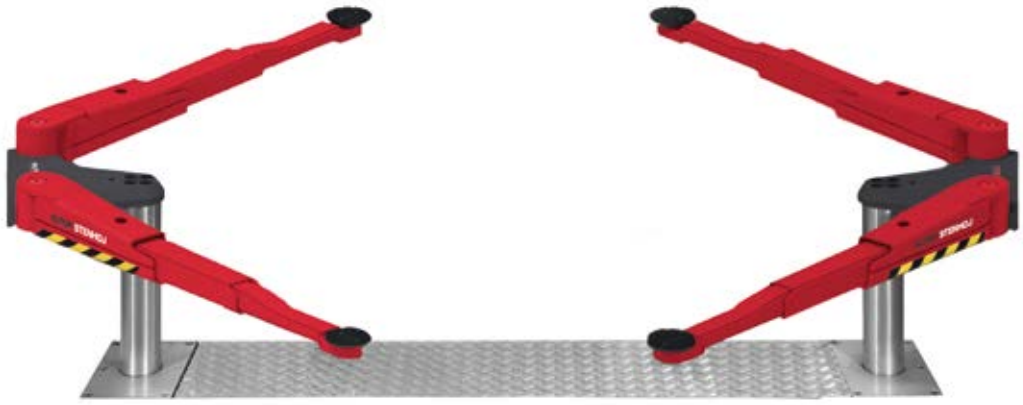

Application

- ☐ Repair and maintenance
- ☐ Body work

Approvals

- ☐ Saa 230:
  - BMW / Mini
  - Rolls-Royce
  - Volkswagen Group
- ☐ Saa 260 Universal:
  - Mercedes-Benz

Masterlift 2.35 Saa

Electro-hydraulic twin-ram lift, 3.5 t capacity, superstructure with arms

Description:

Steel cassette:
- ☐ Waterproof steel cassette

Hydraulic unit:
- ☐ Hard-chrome plated cylinder
- ☐ Flexible synchronization and safety system
- ☐ Corrosion-free guiding elements
- ☐ Pump unit with immersed motor
- ☐ Ecological hydraulic fluid
- ☐ Pneumatic emergency lowering
- ☐ Programmable pushbutton control unit

Superstructure:
- ☐ Double-telescopic arms
- ☐ Internal arm locking system
- ☐ Low minimum height - perfect for sports cars - with a minimum height under 100 mm

Standard colours
- ☐ Base plate: Grey RAL 7016
- ☐ Arms: Red RAL 3020

Illustrations are not binding and optional. Under reserve of dimensional, constructional and technical modifications! Validity 07/2016

Technical data	
Lifting capacity	3,500 kg
Lifting height	1,835 mm
Working height	P: 1,930 mm WF: 1,995 mm + Rubber pads
Cylinder diameter	4 x 123 mm
Distance between cylinders	1,335 mm
Lifting / lowering time	app. 30 Sec.
Foundation depth	2,625 mm
Pump unit	3.0 kW
Ecological hydraulic fluid	14 l
Voltage	230/400 V - 50 Hz - 16 A

Pv superstructure	
Total length min. - max.	120 - 180: app. 1,200 - 1,800 mm 140 - 200: app. 1,400 - 2,000 mm 160 - 220: app. 1,600 - 2,200 mm 170 - 240: app. 1,700 - 2,400 mm
Min. height	65 mm

Platforms	
Total length	5,130 mm
Usable length of platform	4,400 mm
Wheel base	app. 3,900 mm
Platform width	550 mm
Distance between platforms	930 mm
Drive-on height	95 mm

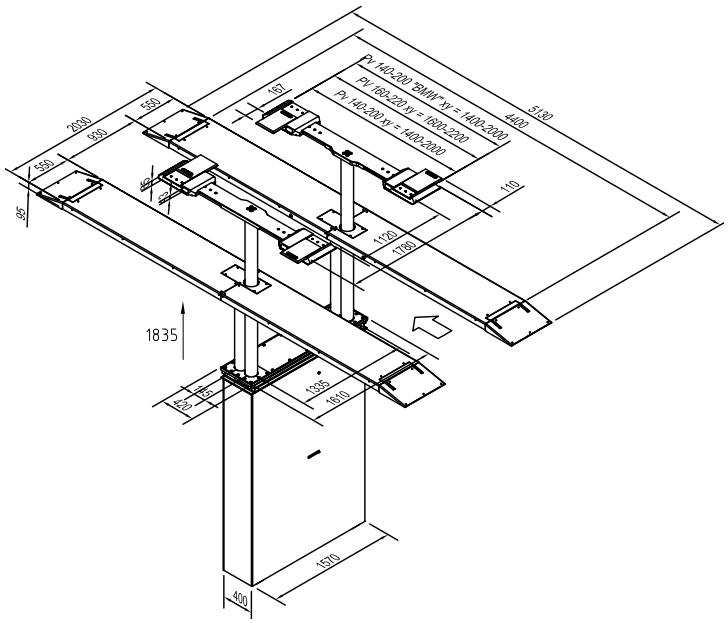

Scan the QR-Code for detailed product information.

Further Information on www.autopstenhoj.com

Versions:

Steel cassette:
- ☐ Zinc-coated
- ☐ Coated
- ☐ Self-carrying

Superstructure Pv:
- ☐ Lifting supports in different lengths (120-180, 140-200, 160-220 & 170 - 240)

Installation:
- ☐ Superstructure on floor
- ☐ Superstructure in floor
- ☐ Ceiling installation

Optional extras:

- ☐ XY-pads
- ☐ Sets of rubber blocks, 40, 60, 80 and 100 mm

Special colours available on request!

Application

- ☐ Check-in
- ☐ Repair and maintenance
- ☐ Testing equipment

Approvals

- ☐ Volkswagen Group



Masterlift 2.35 Combi Check-in – 1335

Electro-hydraulic 2xtwin-ram lift, 3.5 t, with platforms and Free-wheel device with flat lifting supports

Description:

Steel cassette:
- ☐ Waterproof steel cassette

Hydraulic unit:
- ☐ Hard-chrome plated cylinder
- ☐ Flexible synchronization and safety system
- ☐ Corrosion-free guiding elements
- ☐ Pump unit with immersed motor
- ☐ Ecological hydraulic fluid
- ☐ Pneumatic emergency lowering
- ☐ Programmable pushbutton control unit

Superstructure:
- ☐ A set of platforms with drive-on ramps and stops
- ☐ Lighting set incl.

Free-wheel device Pv:
- ☐ Stable lifting supports, lengthwise adjustable
- ☐ Rubber-coated, non-skid pads
- ☐ Low minimum height

Standard colours
- ☐ Platforms: Grey RAL 7016 and aluminium coated
- ☐ Pv Premium: zink coated and painted grey RAL 7016

Illustrations are not binding and optional. Under reserve of dimensional, constructional and technical modifications! Validity 07/2016

Technical data	
Lifting capacity	3,500 kg
Lifting height	1,870 mm
Working height	P: 1,965 mm WF: 2,030 mm + Rubber pads
Cylinder diameter	4 x 140 mm
Distance between cylinders	1,550 mm
Lifting / lowering time	app. 30 Sec.
Foundation depth	2,625 mm
Pump unit	3.0 kW
Ecological hydraulic fluid	14 l
Voltage	230/400 V - 50 Hz - 16 A

Pv superstructure	
Total length min. - max.	120 - 180: app. 1,200 - 1,800 mm 140 - 200: app. 1,400 - 2,000 mm 160 - 220: app. 1,600 - 2,200 mm 170 - 240: app. 1,700 - 2,400 mm
Min. height	65 mm

Platforms	
Total length	5,580 mm
Usable length of platform	4,400 mm
Wheel base	app. 3,900 mm
Platform width	650 mm
Distance between platforms	900 mm
Drive-on height	95 mm

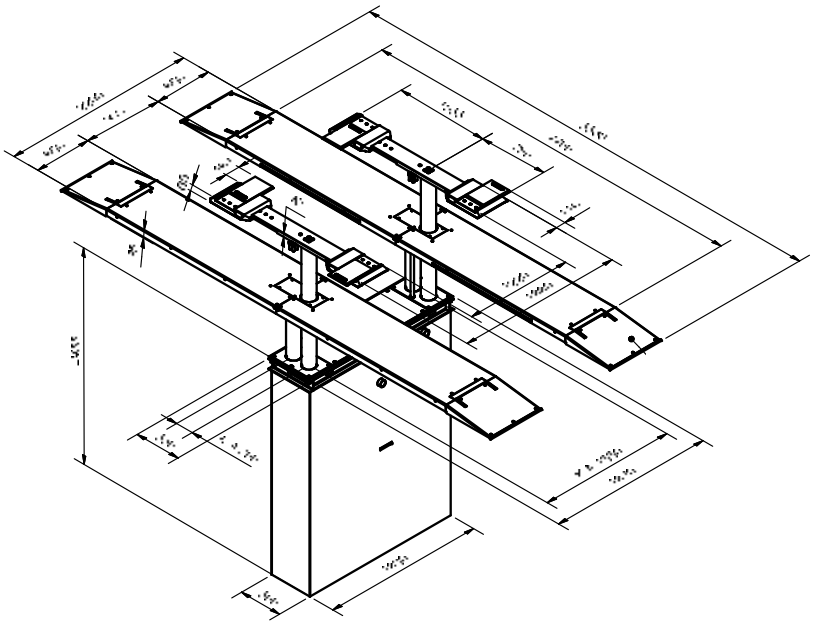

Scan the QR-Code for detailed product information.

Further Information on www.autopstenhoj.com

Versions:

Steel cassette:
- ☐ Zinc-coated
- ☐ Coated

Superstructure Pv:
- ☐ Lifting supports in different lengths (120-180, 140-200, 160-220 & 170 - 240)

Installation:
- ☐ Superstructure on floor
- ☐ Superstructure in floor

Optional extras:

- ☐ XY-pads
- ☐ Sets of rubber blocks, 40, 60, 80 and 100 mm
- ☐ Large program of extra pads

Special colours available on request!

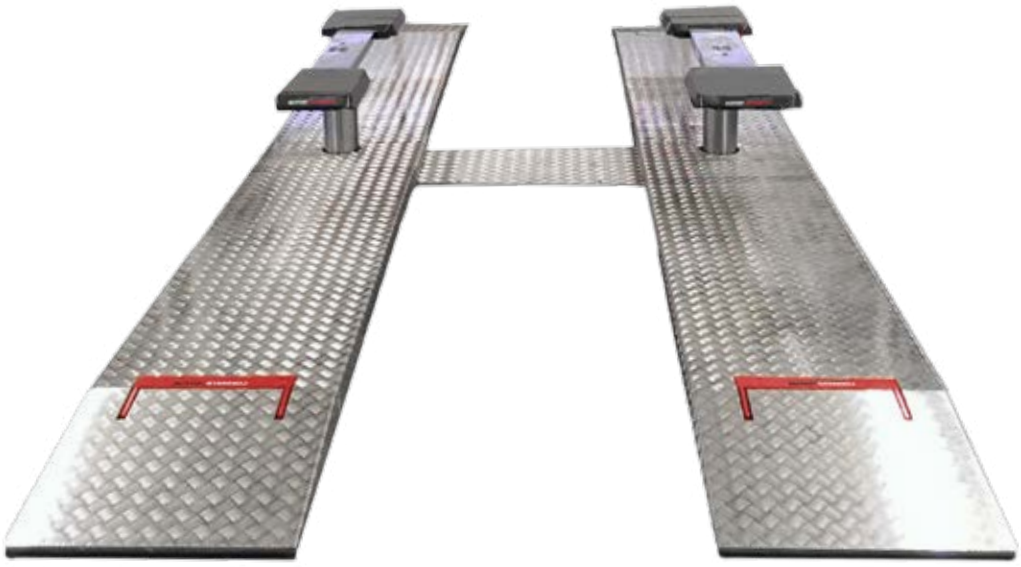

Application

- ☐ Check-in
- ☐ Repair and maintenance
- ☐ Testing equipment

Approvals

- ☐ Mercedes-Benz
- ☐ Volkswagen Group

Masterlift 2.35 Combi Check-in – 1550

Electro-hydraulic 2xtwin-ram lift, 3.5 t, with platforms and Free-wheel device with flat lifting supports

Description:

Steel cassette:
- ☐ Waterproof steel cassette

Hydraulic unit:
- ☐ Hard-chrome plated cylinder
- ☐ Flexible synchronization and safety system
- ☐ Corrosion-free guiding elements
- ☐ Pump unit with immersed motor
- ☐ Ecological hydraulic fluid
- ☐ Pneumatic emergency lowering
- ☐ Programmable pushbutton control unit

Superstructure:
- ☐ A set of platforms with drive-on ramps and stops
- ☐ Low drive-on angle (<8°), perfect for sports cars

Free-wheel device Pv:
- ☐ Stable lifting supports, lengthwise adjustable
- ☐ Rubber-coated, non-skid pads
- ☐ Low minimum height

Standard colours
- ☐ Platforms: Grey RAL 7016 and aluminium coated and integrated LED lightning
- ☐ Pv Premium: zink coated and painted grey RAL 7016

Illustrations are not binding and optional. Under reserve of dimensional, constructional and technical modifications! Validity 07/2016

Technical data	
Lifting capacity	3,500 kg
Lifting height	1,905 mm
Working height	P: 2,055 mm WF Saav: 2,135 mm WF Pv: 2,120 mm + Rubber pads
Cylinder diameter	4 x 123 mm
Distance between cylinders	1,335 / 1,705 mm
Lifting / lowering time	app. 35 Sec.
Foundation depth	2,875 mm
Pump unit	3.0 kW
Ecological hydraulic fluid	14 l
Voltage	230/400 V - 50 Hz - 16 A

Arm superstructure	
Total width	3,210 mm
Lifting pad included in the delivery	Uni: 11027 (95 - 135 mm) Sport: 29265 (70 - 95 mm
Min. height	Uni: 95 - 135 mm Sport: 70 - 95 mm
Arm length, min. - max.	710 - 1,445 mm

Platforms	
Total length	app. 5,300 mm
Usable length of platform	4,200 mm
Wheel base	app. 3,700 mm
Platform width	605 mm
Distance between platforms	910 mm
Drive-on height	150 mm

Pv superstructure	
Total length min. - max.	120 - 180: app. 1,200 - 1,800 mm 140 - 200: app. 1,400 - 2,000 mm 160 - 220: app. 1,600 - 2,200 mm 170 - 240: app. 1,700 - 2,400 mm
Min. height	65 mm

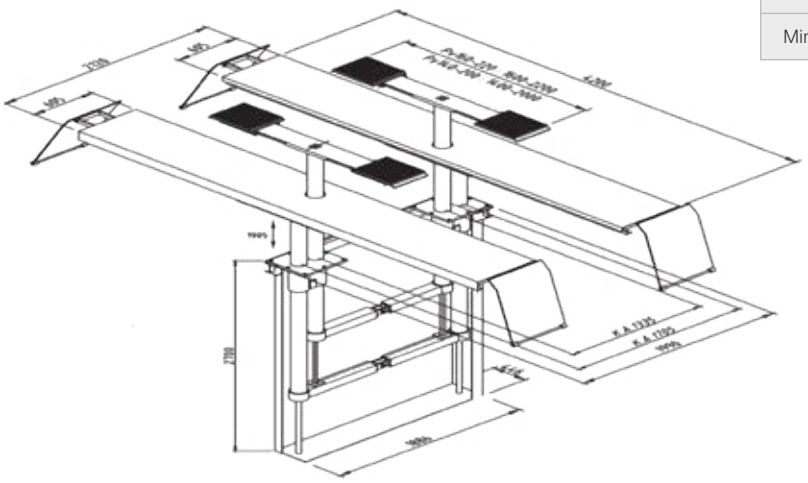

Scan the QR-Code for detailed product information.

Further Information on www.autopstenhoj.com

Versions:

Steel cassette:
- ☐ Zinc-coated
- ☐ Coated

Superstructure Pv:
- ☐ Lifting supports in different lengths (120-180, 140-200, 160-220 & 170-240)
- ☐ Also available as in-ground (140-200 or 160-220)

Installation:
- ☐ Superstructure on floor
- ☐ Superstructure in floor with or without flush floor device
- ☐ Ceiling installation

Optional extras:

- ☐ XY-pads
- ☐ Sets of rubber blocks, 40, 60, 80 and 100 mm
- ☐ Large program of extra pads

Special colours available on request!



Application

- ☐ Check-in
- ☐ Repair and maintenance
- ☐ Testing equipment

Approvals

- ☐ ML 2.35 Pv Combi: Jaguar
- ☐ ML 2.35 Saav 135 Combi: Volkswagen Group

Masterlift 2.35 Combi

Electro-hydraulic 2xtwin-ram lift, 3.5 t, with platforms and Free-wheel device with flat lifting supports

Description:

Steel cassette:
- ☐ Waterproof steel cassette

Hydraulic unit:
- ☐ Hard-chrome plated cylinder
- ☐ Flexible synchronization and safety system
- ☐ Corrosion-free guiding elements
- ☐ Pump unit with immersed motor
- ☐ Ecological hydraulic fluid
- ☐ Pneumatic emergency lowering
- ☐ Programmable pushbutton control unit

Superstructure:
- ☐ FA set of platforms with drive-on ramps and stops

Free-wheel device Pv:
- ☐ Stable lifting supports, lengthwise adjustable
- ☐ Rubber-coated, non-skid pads
- ☐ Low minimum height

Free-wheel device Saav:
- ☐ Double-telescopic arms, sideways adjustable
- ☐ Internal arm locking system
- ☐ Low minimum height

Standard colours
- ☐ Platforms: Grey RAL 7016
- ☐ Ramps: Red RAL 3020
- ☐ Saav: Base plate RAL 7016, arms and slider red RAL 3020
- ☐ Pv Premium: zink coated and painted grey RAL 7016

Illustrations are not binding and optional. Under reserve of dimensional, constructional and technical modifications! Validity 07/2016

Technical data	
Lifting capacity	4,000 kg
Lifting height	1,960 mm
Working height	2,110 mm
Cylinder diameter	2 x 140 mm
Distance between cylinders	1,315 mm
Lifting / lowering time	app. 30 Sec.
Foundation depth	2,625 mm
Pump unit	3.0 kW
Ecological hydraulic fluid	app. 10 l
Voltage	230/400 V - 50 Hz - 16 A

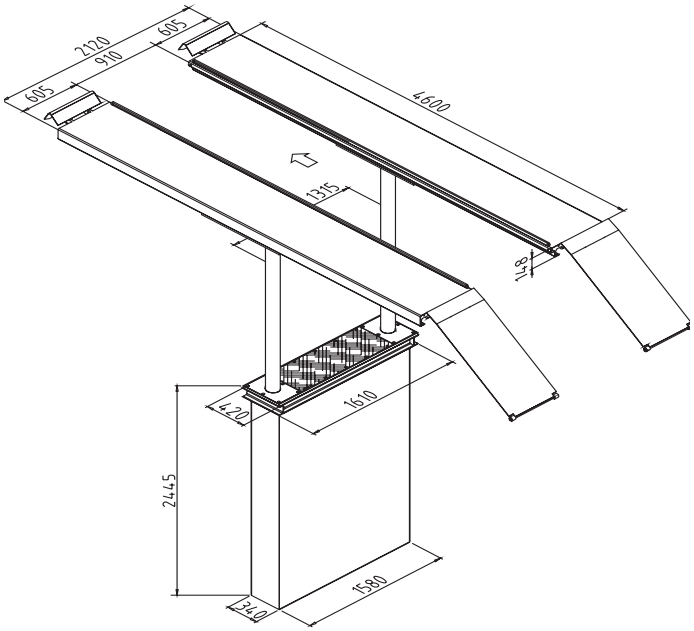

Platforms	
Total length	app. 5,700 mm
Usable length of platform	4,600 mm
Wheel base	app. 4,100 mm
Platform width	605 mm
Distance between platforms	910 mm
Drive-on height	150 mm

Free-wheel device (Fn 460)	
Lifting capacity	3,500 kg
Lenght	1,400 - 2,100 mm
Lifting height	370 mm + Rubber pads
Drive-on height	25 mm
Lifting / lowering time	app. 8 Sec.
Operation	elektro-hydraulic

Scissor jack (F 460 - Option)	
Lifting capacity	2,000 Kg
Lifting height	250 mm
Operation	Air-hydraulic
Lift positions	Middle / 780 - 1,610 mm

Play detector (optional extra)	
Max. axle load	2,500 Kg
Drive-over height	150 mm
Operation	hydraulic

Scan the QR-Code for detailed product information.

Further Information on www.autopstenhoj.com

Versions:

Steel cassette:
- ☐ Zinc-coated
- ☐ Coated
- ☐ Self-carrying

Installation:
- ☐ Superstructure on floor
- ☐ Superstructure in floor with or without flush floor device
- ☐ Ceiling installation

Optional extras:

Superstructure platform:
- ☐ Supporting legs for wheel alignment
- ☐ Aluminium coating
- ☐ Scissor jack
- ☐ Play detector
- ☐ Lighting set

Superstructure Fn:
- ☐ XY-pads

Special colours available on request!



Application

- ☐ Check-in
- ☐ Repair and maintenance
- ☐ Wheel alignment
- ☐ Testing equipment

Approvals

- ☐ All models:
  Renault
- ☐ PL 2.40 F 460:
  Jaguar
  Landrover
  Volkswagen Group
- ☐ PL 2.40 Fn 460:
  BMW / Mini,
  Opel

Profilift 2.40 F 460

Electro-hydraulic twin-ram lift, 4 t, with platforms

Description:

Steel cassette:
- ☐ Waterproof steel cassette

Hydraulic unit:
- ☐ Hard-chrome plated cylinder
- ☐ Flexible synchronization and safety system
- ☐ Corrosion-free guiding elements
- ☐ Pump unit with immersed motor
- ☐ Ecological hydraulic fluid
- ☐ Pneumatic emergency lowering
- ☐ Programmable pushbutton control unit

Superstructure:
- ☐ A set of platforms with drive-on ramps and stops
- ☐ High-quality anti-slip coating in RAL 7016

Free-wheel device Fn:
- ☐ Free-wheel device with adjustability lengthwise
- ☐ Rubber-coated, non-skid pads
- ☐ Low minimum height

Standard colours
- ☐ Platforms: Grey RAL 7016
- ☐ Free-wheel device: Grey RAL 7016
- ☐ Ramps: Red RAL 3020

Illustrations are not binding and optional. Under reserve of dimensional, constructional and technical modifications! Validity 07/2016

Technical data	
Lifting capacity	5,000 / 5,500 kg
Lifting height	1,865 mm
Working height	2,000 - 2,060 mm
Cylinder diameter	2 x 213 mm
Distance between cylinders	1,350 mm
Lifting / lowering time	app. 45 Sec.
Foundation depth	2,625 mm
Pump unit	3.0 kW
Ecological hydraulic fluid	18 l
Voltage	230/400 V - 50 Hz - 16 A

Arm superstructure	
Total width	3,130 mm
Lifting pad included in the delivery	11028 (135 - 195 mm)
Min. height	135 - 195 mm
Arm length, min. - max.	715 - 1,410 mm

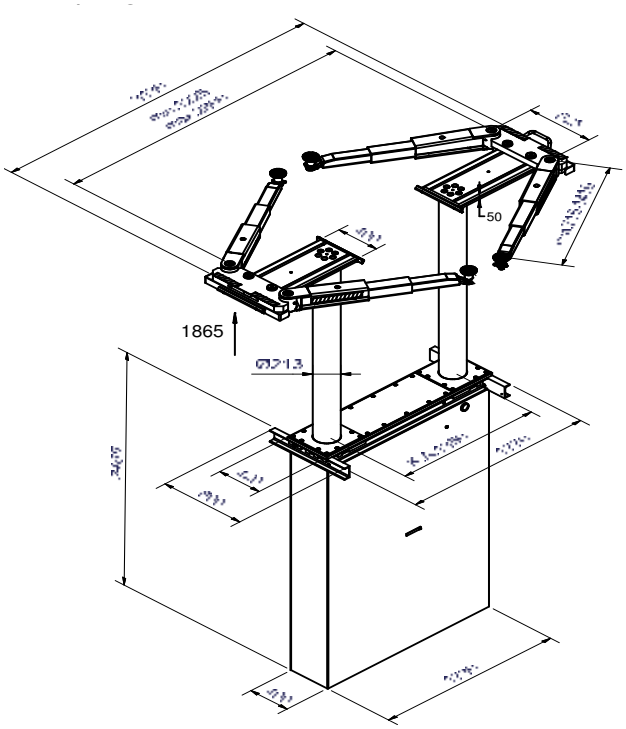

Scan the QR-Code for detailed product information.

Further Information on www.autopstenhoj.com

Versions:

Steel cassette:
- ☐ Zinc-coated
- ☐ Coated
- ☐ Self-carrying

Installation:
- ☐ Superstructure on floor
- ☐ Ceiling installation

Optional extras:

- ☐ Large program of extra pads

Special colours available on request!



Application

- ☐ Repair and maintenance

Approvals

- ☐ Jaguar
- ☐ Landrover
- ☐ Opel
- ☐ Volkswagen Group

Biglift 2.50/55 Saav 145 Jumbo

Electro-hydraulic twin-ram lift, 5/5.5 t with superstructure with arms

Description:

Steel cassette:
- ☐ Waterproof steel cassette

Hydraulic unit:
- ☐ Hard-chrome plated cylinder
- ☐ Flexible synchronization and safety system
- ☐ Corrosion-free guiding elements
- ☐ Pump unit with immersed motor
- ☐ Ecological hydraulic fluid
- ☐ Pneumatic emergency lowering
- ☐ Programmable pushbutton control unit – great stability, even with uneven weight distribution; due to the cylinder diameter of 213 mm

Superstructure:
- ☐ Double telescopic arms, crosswise adjustable
- ☐ Internal arm locking system
- ☐ Low minimum height

Standard colours
- ☐ Base plate: Grey RAL 7016
- ☐ Arms: Red RAL 3020

Illustrations are not binding and optional. Under reserve of dimensional, constructional and technical modifications! Validity 07/2016

Technical data	
Lifting capacity	5,000 kg
Lifting height	1,865 mm
Working height	2,005 - 2,065 mm
Cylinder diameter	2 x 213 mm
Distance between cylinders	Saa 230: 2.150 mm Saa 265: 2.650 mm
Lifting / lowering time	app. 45 Sec.
Foundation depth	2,625 mm
Pump unit	3.0 kW
Ecological hydraulic fluid	18 l
Voltage	230/400 V - 50 Hz - 16 A

Arm superstructure	
Total width	2,950 mm
Lifting pad included in the delivery	11028 (135 - 195 mm)
Min. height	135 - 195 mm
Drive-through width	Saa 230: 1,930 mm Saa 265: 2,430 mm
Arm length, min. - max.	715 - 1,410 mm

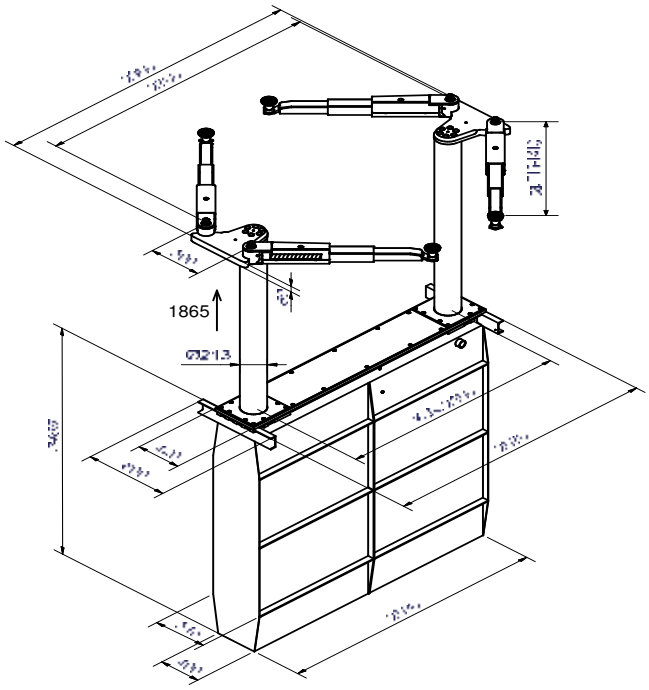

Scan the QR-Code for detailed product information.

Further Information on www.autopstenhoj.com

Versions:

- ☐ Saa 230 & Saa 265

Steel cassette:
- ☐ Zinc-coated
- ☐ Coated
- ☐ Self-carrying (Saa 230)

Installation:
- ☐ Superstructure on floor
- ☐ Superstructure in floor with covers (Saa 230)
- ☐ Ceiling installation (Saa 230)

Optional extras:

- ☐ Large program of extra pads

Special colours available on request!



Application

- Repair and maintenance
- Body work

Approvals

- All models:
  Renault
- Saa 230:
  Volkswagen Group
- Saa 265:
  Mercedes-Benz
  Volkswagen Group

Biglift 2.50 Saa

Electro-hydraulic twin-ram lift, 5 t with superstructure with arms

Description:

Steel cassette:
- Waterproof steel cassette

Hydraulic unit:
- Hard-chrome plated cylinder
- Flexible synchronization and safety system
- Corrosion-free guiding elements
- Pump unit with immersed motor
- Ecological hydraulic fluid
- Pneumatic emergency lowering
- Programmable pushbutton control unit – great stability, even with uneven weight distribution; due to the cylinder diameter of 213 mm

Superstructure:
- Double telescopic arms
- Internal arm locking system
- Low minimum height

Saa 265:
- Mechanical ratchet system integrated in the hydraulic unit
- Necessary air pressure (clean, dry, lubricated): min. 6 bar / max. 10 bar

Standard colours
- Base plate: Grey RAL 7016
- Arms: Red RAL 3020

Illustrations are not binding and optional. Under reserve of dimensional, constructional and technical modifications! Validity 07/2016

Technical data	
Lifting capacity	5,500 kg
Lifting height	1,865 mm
Working height	2,030 mm
Cylinder diameter	2 x 213 mm
Distance between cylinders	1,550 mm
Lifting / lowering time	app. 45 Sec.
Foundation depth	2,625 mm
Pump unit	3.0 kW
Ecological hydraulic fluid	18 l
Voltage	230/400 V - 50 Hz - 16 A

Platforms	
Total length	app. 6,100 mm
Usable length of platform	4,800 mm
Wheel base	4,300 mm
Platform width	650 mm
Distance between platforms	900 mm
Drive-on height	165 mm

Scissor jack (Option)	
Lifting capacity	2,600 Kg
Lifting height	250 mm
Operation	Air-hydraulic
Lift positions	Middle / 790 - 1,460 mm

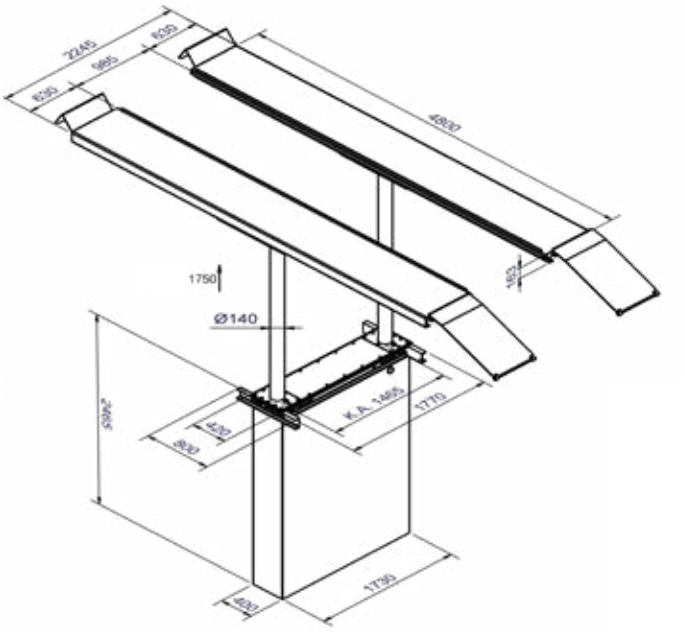

Scan the QR-Code for detailed product information.

Further Information on www.autopstenhoj.com

Versions:

Steel cassette:
- ☐ Zinc-coated
- ☐ Coated

Installation:
- ☐ Superstructure on floor
- ☐ Superstructure in floor

Optional extras:

- ☐ LED-Lighting set
- ☐ Scissor jack

Special colours available on request!

Application

- ☐ Check-in
- ☐ Repair and maintenance
- ☐ Testing equipment



Biglift 2.55 F 480

Electro-hydraulic twin-ram lift, 5.5 t with platforms

Description:

Steel cassette:
- ☐ Waterproof steel cassette

Hydraulic unit:
- ☐ Hard-chrome plated cylinder
- ☐ Flexible synchronization and safety system
- ☐ Corrosion-free guiding elements
- ☐ Pump unit with immersed motor
- ☐ Ecological hydraulic fluid
- ☐ Pneumatic emergency lowering
- ☐ Programmable pushbutton control unit – great stability, even with uneven weight distribution; due to the cylinder diameter of 213 mm

Superstructure:
- ☐ A set of platforms with drive-on ramps and stops

Standard colours
- ☐ Platforms: Grey RAL 7016
- ☐ Ramps: Red RAL 3020

Illustrations are not binding and optional. Under reserve of dimensional, constructional and technical modifications! Validity 07/2016

Technical data	
Lifting capacity	5,500 kg
Lifting height	1,895 mm
Working height	P: 2,060 mm WF: 2.210 - 2.270 mm
Cylinder diameter	8 x 140 mm
Distance between cylinders	1,240 - 1,850 mm
Lifting / lowering time	app. 38 Sec.
Foundation depth	2,625 mm
Pump unit	3.0 kW
Ecological hydraulic fluid	18 l
Voltage	230/400 V - 50 Hz - 16 A

Arm superstructure	
Total width	3,265 mm
Lifting pad included in the delivery	11028 (135 - 195 mm)
Min. height	135 - 195 mm
Arm length, min. - max.	715 - 1,410 mm

Platforms	
Total length	app. 6,800 mm
Usable length of platform	5,500 mm
Wheel base	app. 5,000 mm
Platform width	650 mm
Distance between platforms	900 mm
Drive-on height	165 mm

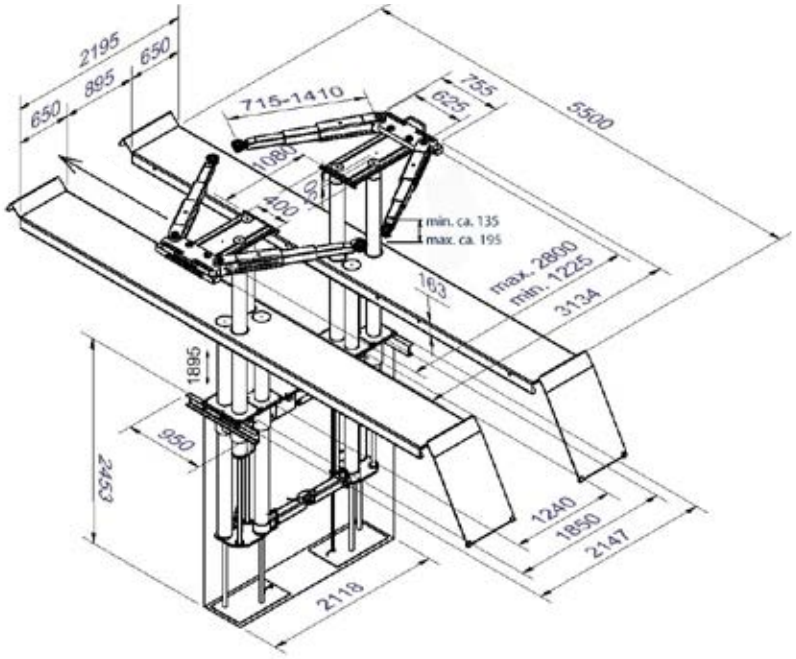

Scan the QR-Code for detailed product information.

Further Information on www.autopstenhoj.com

Versions:

Steel cassette:
- ☐ Zinc-coated
- ☐ Coated

Installation:
- ☐ Superstructure on floor
- ☐ Superstructure in floor with or without flush floor device

Optional extras:

- ☐ LED-Lighting set
- ☐ Large program of extra pads

Special colours available on request!

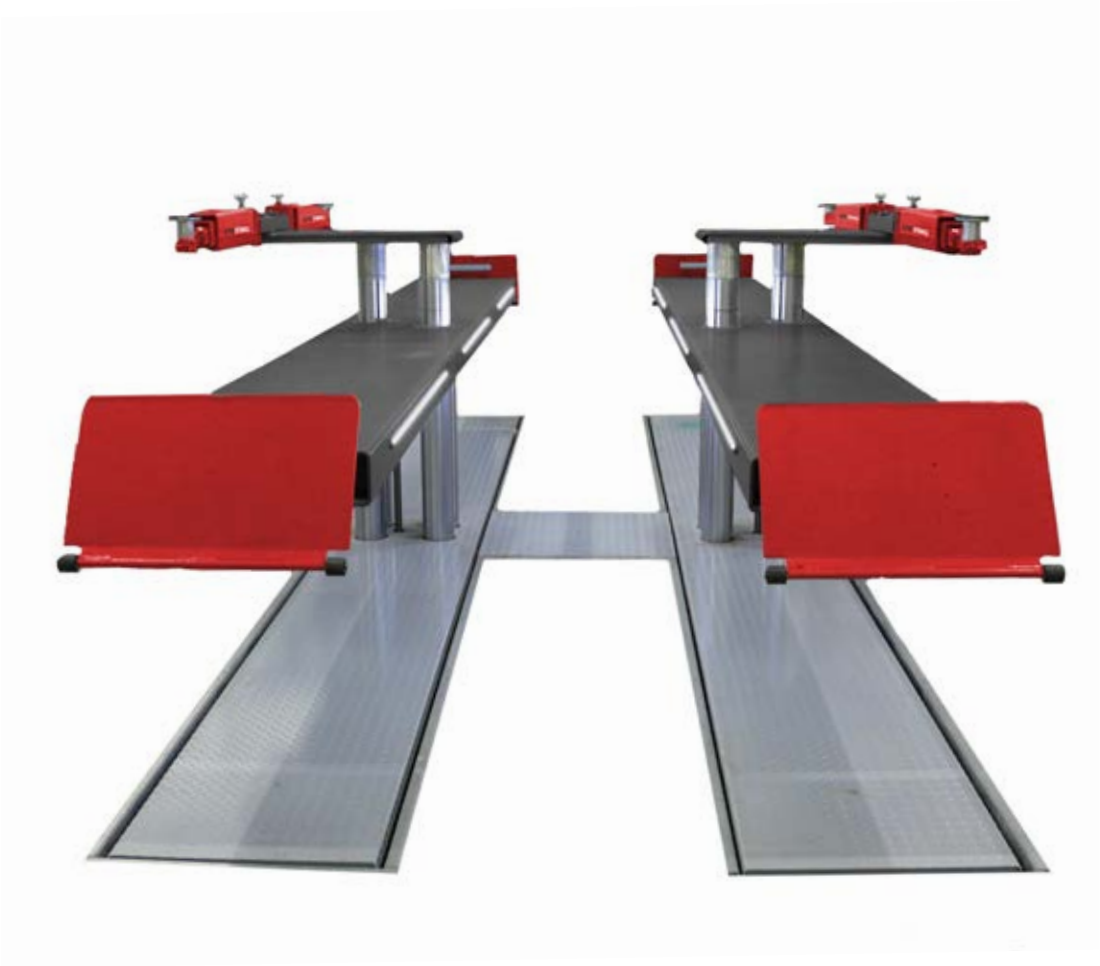

Application

- ☐ Check-in
- ☐ Repair and maintenance
- ☐ Testing equipment

Approvals

- ☐ Volkswagen Group

Biglift 4.55 Combi

Electro-hydraulic 2xtwin-ram lift, 5.5 t with platforms and Free-wheel device with arms

Description:

Steel cassette:
- ☐ Waterproof steel cassette

Hydraulic unit:
- ☐ Hard-chrome plated cylinder
- ☐ Flexible synchronization and safety system
- ☐ Corrosion-free guiding elements
- ☐ Pump unit with immersed motor
- ☐ Ecological hydraulic fluid
- ☐ Pneumatic emergency lowering
- ☐ Programmable pushbutton control unit – great stability, even with uneven weight distribution (all 4 cylinders in operation)

Superstructure:
- ☐ A set of platforms with drive-on ramps and stops

Free-wheel device Saav:
- ☐ Double telescopic arms, crosswise adjustable
- ☐ Internal arm locking system
- ☐ Low minimum height

Standard colours
- ☐ Platforms: Grey RAL 7016
- ☐ Free-wheel device: Base plate: Grey RAL 7016, Arms and slider: Red RAL 3020
- ☐ Ramps: Red RAL 3020

Illustrations are not binding and optional. Under reserve of dimensional, constructional and technical modifications! Validity 07/2016

Technical data	
Lifting capacity	6,500 kg
Lifting height	1,865 mm
Working height	2,045 mm
Cylinder diameter	2 x 213 mm
Distance between cylinders	1,550 mm
Lifting / lowering time	app. 45 Sec.
Foundation depth	2,625 mm
Pump unit	3.0 kW
Ecological hydraulic fluid	18 l
Voltage	230/400 V - 50 Hz - 16 A

Platforms	
Total length	app. 6,800 mm
Usable length of platform	5,500
Wheel base	app. 5,000 mm
Platform width	650 mm
Distance between platforms	900 mm
Drive-on height	180 mm

Scissor jack (Option)	
Lifting capacity	2,600 Kg
Lifting height	250 mm
Operation	Air-hydraulic
Lift positions	Middle / 790 - 1.460 mm

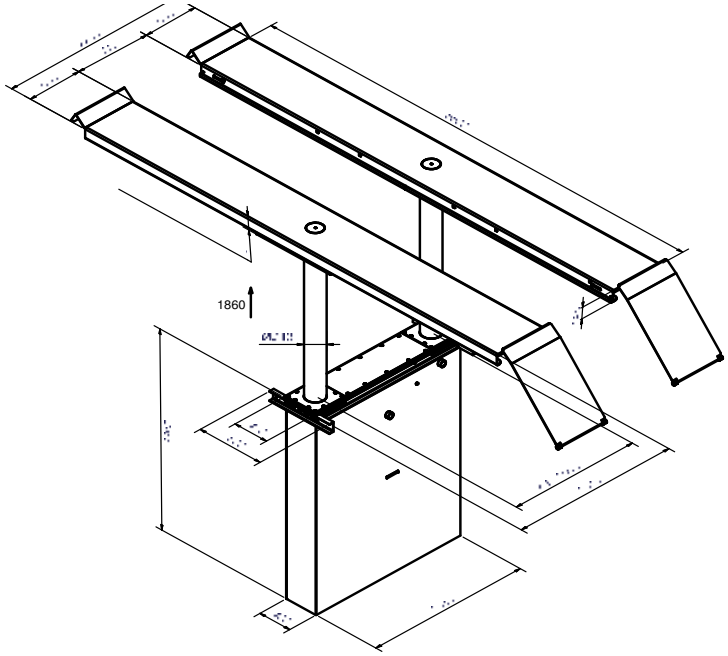

Scan the QR-Code for detailed product information.

Further Information on www.autopstenhoj.com

Versions:

Steel cassette:
- ☐ Zinc-coated
- ☐ Coated

Installation:
- ☐ Superstructure on floor
- ☐ Superstructure in floor

Optional extras:

- ☐ LED-Lighting set
- ☐ Scissor jack

Special colours available on request!



Application

- ☐ Check-in
- ☐ Repair and maintenance
- ☐ Testing equipment

Approvals

- ☐ Renault
- ☐ Volkswagen Group

Biglift 2.65 F 550

Electro-hydraulic twin-ram lift, 6.5 t with platforms

Description:

Steel cassette:
- ☐ Waterproof steel cassette

Hydraulic unit:
- ☐ Hard-chrome plated cylinder
- ☐ Flexible synchronization and safety system
- ☐ Corrosion-free guiding elements
- ☐ Pump unit with immersed motor
- ☐ Ecological hydraulic fluid
- ☐ Pneumatic emergency lowering
- ☐ Programmable pushbutton control unit – great stability, even with uneven weight distribution; due to the cylinder diameter of 213 mm

Superstructure:
- ☐ A set of platforms with drive-on ramps and stops

Standard colours
- ☐ Platforms: Grey RAL 7016
- ☐ Ramps: Red RAL 3020

Illustrations are not binding and optional. Under reserve of dimensional, constructional and technical modifications! Validity 07/2016

Technical data	
Lifting capacity	6,500 kg
Lifting height	1,865 mm
Working height	2,015 - 2,075 mm
Cylinder diameter	2 x 213 mm
Distance between cylinders	Saaa 145: 1,350 mm Saaa 230: 2,150 mm Saaa 265: 2,650 mm
Lifting / lowering time	app. 45 Sec.
Foundation depth	2,625 mm
Pump unit	3.0 kW
Ecological hydraulic fluid	18 l
Voltage	230/400 V - 50 Hz - 16 A

Arm superstructure	
Total width	3,390 mm
Lifting pad included in the delivery	11028 (135 - 195 mm)
Min. height	135 - 195 mm
Drive-through width	Saaa 230: 1,930 mm Saaa 265: 2,430 mm
Arm length, min. - max.	770 - 1,640 mm

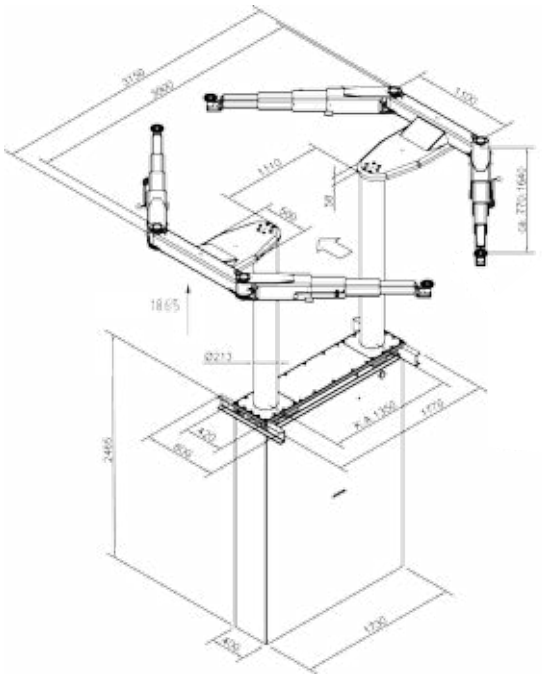

Scan the QR-Code for detailed product information.

Further Information on www.autopstenhoj.com

Versions:

- ☐ Saaa 145, Saaa 230, Saaa 265

Steel cassette:
- ☐ Zinc-coated
- ☐ Coated
- ☐ Self-carrying (Saaa 230)

Installation:
- ☐ Superstructure on floor
- ☐ Superstructure in floor with covers (Saaa 230)
- ☐ Ceiling installation (Saaa 230)

Optional extras:

- ☐ Large program of extra pads

Special colours available on request!



Application

- Repair and maintenance
- Body work

Approvals

- Saaa 145:
  Volkswagen Group
- Saaa 230:
  Renault
  Volkswagen Group
- Saaa 265:
  Mercedes-Benz
  Volkswagen Group

Biglift 2.65 Saaa

Electro-hydraulic twin-ram lift, 6.5 t with superstructure with arms

Description:

Steel cassette:
- Waterproof steel cassette

Hydraulic unit:
- Hard-chrome plated cylinder
- Flexible synchronization and safety system
- Corrosion-free guiding elements
- Pump unit with immersed motor
- Ecological hydraulic fluid
- Pneumatic emergency lowering
- Programmable pushbutton control unit – great stability, even with uneven weight distribution; due to the cylinder diameter of 213 mm

Superstructure:
- Triple telescopic arms
- Internal arm locking system
- Low minimum height

Saaa 265:
- Mechanical ratchet system integrated in the hydraulic unit
- Necessary air pressure (clean, dry, lubricated): min. 6 bar / max. 10 bar

Standard colours
- Base plate: Grey RAL 7016
- Arms: Red RAL 3020

Illustrations are not binding and optional. Under reserve of dimensional, constructional and technical modifications! Validity 07/2016

Technical data	
Lifting capacity	5,500 kg
Lifting height	1,960 mm
Working height	2,155 mm
Cylinder diameter	4 x 140 mm
Distance between cylinders	1,685 / 4,000 mm
Lifting / lowering time	app. 45 Sec.
Foundation depth	2,625 mm
Pump unit	1 x 3.0 kW
Ecological hydraulic fluid	18 l
Voltage	230/400 V - 50 Hz - 16 A

Platforms	
Usable length of platform	F 480: 4,800 mm F 550: 5,500 mm
Wheel base	F 480: 4,150 mm F 550: 4,850 mm
Platform width	650 mm
Distance between platforms	900 mm
Drive-on height	195 mm

Scissor jack (Option)	
Lifting capacity	2,600 Kg
Lifting height	250 mm
Operation	Air-hydraulic
Lift positions	Middle / 790 - 1,460 mm

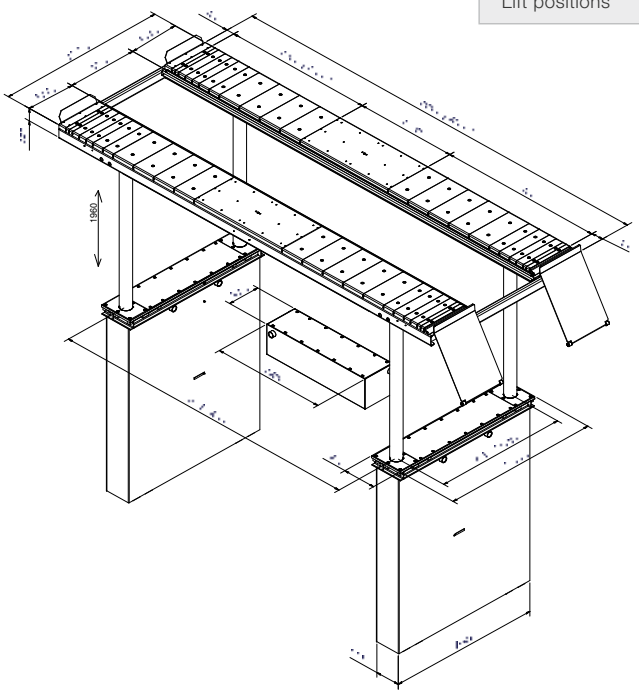

Scan the QR-Code for detailed product information.

Further Information on www.autopstenhoj.com

Versions:

Steel cassette:
- ☐ Zinc-coated
- ☐ Coated

Installation:
- ☐ Superstructure on floor
- ☐ Superstructure in floor

Contact us with regard to the possibilities of combining with other wheel alignment equipment!

Optional extras:

- ☐ LED-Lighting set
- ☐ Precision slip plates
- ☐ Scissor jack

Zink coating and special colours on request!



Application

- ☐ Check-in
- ☐ Repair and maintenance
- ☐ Wheel alignment
- ☐ Testing equipment

Approvals

- ☐ QL 4.55 F 480:
  - Rolls-Royce
  - BMW / Mini
- ☐ QL 4.55 F 550:
  - Renault
  - Volkswagen Group

Quattrolift 4.55 F

Electro-hydraulic 4-ram lift, 5.5 t, with platforms

Description:

Steel cassette:
- ☐ Waterproof steel cassette

Hydraulic unit:
- ☐ 2 separate hydraulic units with hard-chrome plated cylinders
- ☐ Electronic synchronization between the hydraulic units and pre-programmed top stop
- ☐ Flexible synchronization and safety system
- ☐ Corrosion-free guiding elements
- ☐ Hydraulic pump unit with immersed motor
- ☐ Ecological hydraulic fluid
- ☐ Pneumatic emergency lowering
- ☐ Programmable pushbutton control unit

Superstructure:
- ☐ A set of platforms with drive-on ramps and stops Platforms with tolerances of only max ± 0,5 mm length- and crosswise
- ☐ With two recesses front and rear, as well as distance pieces covering the entire length

Necessary air pressure (clean, dry, lubricated):
- ☐ Min. 6 bar / max. 10 bar

Standard colours
- ☐ Platforms: Grey RAL 7016
- ☐ Ramps: Red RAL 3020

Illustrations are not binding and optional. Under reserve of dimensional, constructional and technical modifications! Validity 07/2016

Technical data	
Lifting capacity	6,500 kg
Lifting height	1,865 mm
Working height	2,060 mm
Cylinder diameter	4 x 213 mm
Distance between cylinders	1,550 / 3,000 mm
Lifting / lowering time	app. 35 Sec.
Foundation depth	2,625 mm
Pump unit	2 x 3.0 kW
Ecological hydraulic fluid	18 l
Voltage	230/400 V - 50 Hz - 16 A

Platforms	
Usable length of platform	F 480: 4,800 mm F 550: 5,500 mm
Wheel base	F 480: 4,150 mm F 550: 4,850 mm
Platform width	650 mm
Distance between platforms	900 mm
Drive-on height	195 mm

Scissor jack (Option)	
Lifting capacity	2,600 Kg
Lifting height	250 mm
Operation	Air-hydraulic
Lift positions	Middle / 790 - 1.460 mm

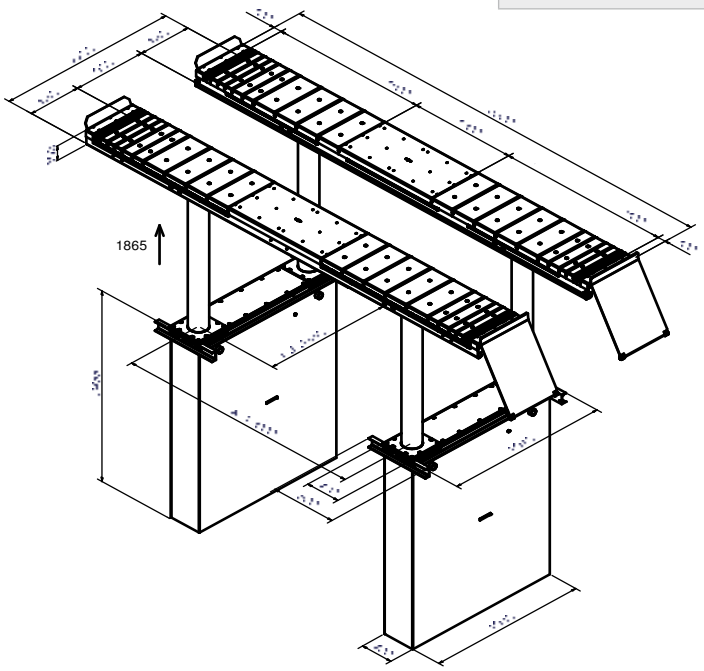

Scan the QR-Code for detailed product information.

Further Information on www.autopstenhoj.com

Versions:

Steel cassette:
- ☐ Zinc-coated
- ☐ Coated

Installation:
- ☐ Superstructure on floor
- ☐ Superstructure in floor

Contact us with regard to the possibilities of combining with other wheel alignment equipment!

Optional extras:

- ☐ LED-Lighting set
- ☐ Precision slip plates
- ☐ Scissor jack

Zink coating and special colours on request!



Application

- ☐ Check-in
- ☐ Repair and maintenance
- ☐ Wheel alignment
- ☐ Testing equipment

Approvals

- ☐ QL 4.65 F 550:
  Mercedes-Benz,
  Volkswagen Group

Quattrolift 4.65 F

Electro-hydraulic 4-ram lift, 6.5 t, with platforms

Description:

Steel cassette:
- ☐ Waterproof steel cassette

Hydraulic unit:
- ☐ 2 separate hydraulic units with hard-chrome plated cylinders
- ☐ Electronic synchronization between the hydraulic units and pre-programmed top stop
- ☐ Flexible synchronization and safety system
- ☐ Corrosion-free guiding elements
- ☐ Pump unit with immersed motor
- ☐ Ecological hydraulic fluid
- ☐ Pneumatic emergency lowering
- ☐ Programmable Pushbutton control unit

Superstructure:
- ☐ A set of platforms with drive-on ramps and stops Platforms with tolerances of only max ± 0,5 mm length- and crosswise
- ☐ With two recesses front and rear, as well as distance pieces covering the entire length and fixated by steel edges in sides

Necessary air pressure (clean, dry, lubricated):
- ☐ Min. 6 bar / max. 10 bar

Standard colours
- ☐ Platforms: Grey RAL 7016
- ☐ Ramps: Red RAL 3020

Illustrations are not binding and optional. Under reserve of dimensional, constructional and technical modifications! Validity 07/2016



Our surface-mounted lifts.

Find out more:
www.autopstenhoj.com



Surface-mounted lifts

☐ **Single-post lift 78**
- Mistral H 25

☐ **2-post lifts – electro mechanic 80**
- Maestro 30 F 80
- Maestro 32 F 82
- Maestro 35 F 84
- Maestro 2.30 F 86
- Maestro 2.32 F 88
- Maestro 2.35 F 90
- Maestro 2.35 F Sport 92
- Maestro 2.50 F 94
- Maestro 2.55 F 96
- Maestro 2.65 F 98

☐ **2-post lift – electro-hydraulic 100**
- Magnat 35

☐ **4-post lifts 102**
- Major 4026 102
- Major 4030 104
- Major 4030-44 WL DLX 106
- Major 5030-53 W Combi 108
- Major 5230 110
- Major 6230 112
- Major 7230 114

☐ **Scissor jacks 116**
- Micro 20 & 26 & 40 Air hydraulic 116
- Micro 20 & 26 LH automatic 118
- Micro 20 & 26 Full hydraulic 120

☐ **Scissor lifts 122**
- MagiX 30 LS 122
- MagiX 30 124
- MagiX 35 126
- MagiX 45 128
- MagiX 50 130

☐ **Accessories 132**



The sturdiest column on the market ...

... doesn't need to hide in the ground.

Take a closer look: For example, the cold-rolled spindle with nut set constructed from high quality, tear-resistant nylon, which guarantees a nearly wear-free operation. Or the carriage with its 6 guiding roller bearings inside of a post which is stabilized with round tubes in all corners. All this consistently ensures that the lift is absolutely stable, which makes you one of our many happy customers!

Premium quality means there is also a high level of safety. Our surface mounted lifts are equipped with all the necessary safety features. All you can perhaps hear is your shout of joy due to the silent operation of the lift.

The safety systems: There are quite a few.

Trust in the many safety devices featured on our surfaced-mounted lifts:
- ☐ Safety against breakage of the nuts
- ☐ Safety for the lowering procedure
- ☐ Safety by electronical synchronization
- ☐ Safety by alarm signal
- ☐ Safety by push button controls with separate main switch

Little investment, rich benefit.

- ☐ Low investment costs
- ☐ Various installation possibilities (in basements or rented facilities)
- ☐ A perfect lift for every application

You can promise only once.
But you can guarantee two years.

After the delivery of your lift you have an allround warranty of two years.
This applies not only to the main components, but also to the spindles, nuts and carriage.

From one advantage to the next.









CORROSION
PROTECTION
AND
MUCH MORE











Your lifts are pillars of your workshop‘s success.

The surfaced mounted program from AUTOPSTENHOJ is just as complete as the range of capacities. Whether you need a 2-post lifts with a capacity of 3.0 t for a private car or a special solution for commercial vehicles up to 7.2 t; the possibilities of our surfaced mounted lifts open up for almost all weight classes and many different vehicle applications.



One focus is on repair and maintenance. But also around diagnostic and MOT as well as in the direct reception. For example, with our Major 4030-44WL which meets with the strictest requirements of the car manufacturers. It is the most precise 4 post lift on the market.

Technical data	
Lifting capacity	2,500 kg
Lifting height	1,900 mm
Working height	C: 2,005 - 2,215 mm S: 2,015 - 2,120 mm
Lifting / lowering time	45 Sec.
Motor	1.5 kw
Voltage	3x230/400V - 50 Hz

Arm superstructure	
Lifting pad included in the delivery	C: 105 - 315 mm S: 115 - 220 mm
Min. height	105 mm
Total height	2,675 mm
Arm length front, min. - max.	C: 605 - 975 mm S: 550 - 885 mm
Arm length rear, min. - max.	C: 605 - 975 mm S: 550 - 885 mm

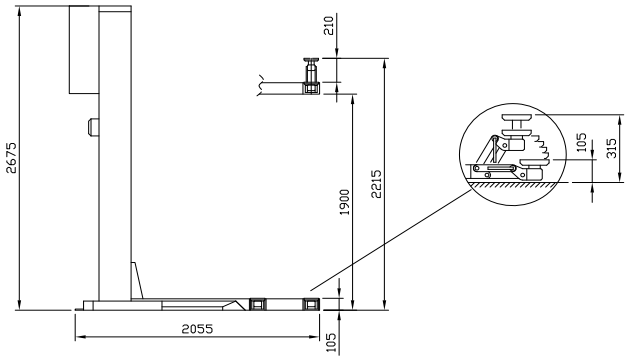

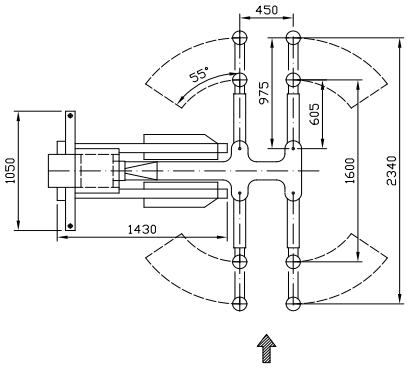

Scan the QR-Code for detailed product information.

Further Information on www.autopstenhoj.com

Versions / Optional extras:

- ☐ Available with different voltage
- ☐ Available with 2 different arm configurations with either S or C pads

Special colours available on request!



Application

- ☐ Repair and maintenance
- ☐ Car wash
  (requires service every 3 months)
- ☐ Body-Repair

Mistral H 25

Electro-hydraulic single post lift, 2.5 t capacity

Description:

- ☐ Simple, sturdy post
- ☐ Takes up very little space in the workshop
- ☐ Easy access to both sides of vehicle
- ☐ Single telescopic arms

Standard colours
- ☐ Arms: Red RAL 3020
- ☐ Post: Grey RAL 7016

Illustrations are not binding and optional. Under reserve of dimensional, constructional and technical modifications! Validity 07/2016

Technical data	
Lifting capacity	3,000 kg
Lifting height	1,900 mm
Working height	1,995 - 2,025 mm
Lifting / lowering time	app. 40 Sec.
Motor	2 x 1.5 kw
Voltage	3 x 230/400V - 50 Hz - 25/16 A

Arm superstructure	
Lifting pad included in the delivery	P: 777112 (30 - 60 mm) CP: 777539 CF-08: 777395 + 660501
Min. height	95 mm
Drive-through width	2,110 - 2,310 mm
Width between posts	2,365 - 2,565 mm
Total width - outer edges posts	2,875 - 3,075 mm
Total width - outer edges base plates	3,120 - 3,320 mm
Total height post	2,706 mm
Total height inkl. portal	4,050 / 4,350 mm
Arm length front, min. - max.	F Std: 540 - 850 mm F DT: 480 - 840 mm
Arm length rear, min. - max.	900 - 1,425 mm

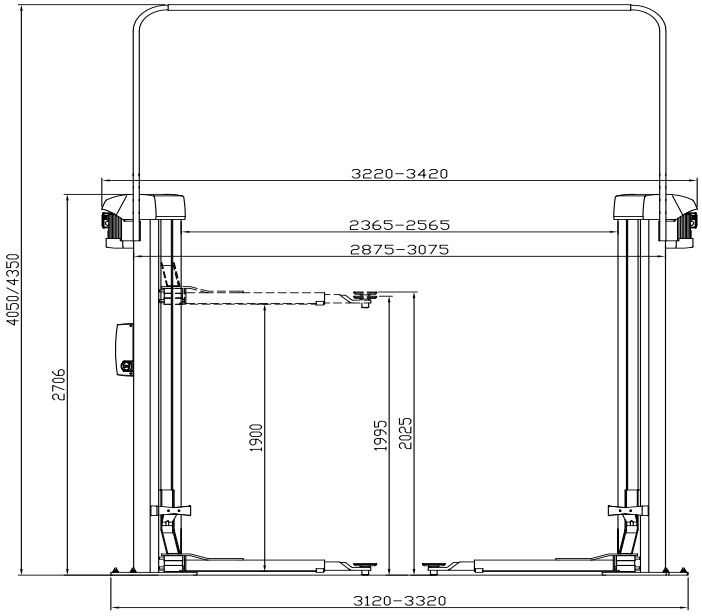

Scan the QR-Code for detailed product information.

Further Information on www.autopstenhoj.com

Versions:

- ☐ Available with different voltage

Installation:
- ☐ F = flex pad
- ☐ CF = combiflex pad
- ☐ CF-08 = combiflex 08 pad
- ☐ DT/- = double telescopic short arms, single telescopic long arms

Optional extras:

- ☐ Available with 2 different portal heights; alternatively in-ground kit
- ☐ LED-Lighting set
- ☐ Power pack
- ☐ Set of expansion bolts
- ☐ Extra control unit
- ☐ Large program of extra pads

Special colours available on request!



Application

- ☐ Repair and maintenance

Approvals

- ☐ Volkswagen Group
- ☐ Volvo

Maestro 30

Electro-mechanical 2-post lift, 3 t capacity

Description:

Posts:
- ☐ Asymmetric post installation
- ☐ Very stable bent posts
- ☐ Without base frame
- ☐ Two motors
- ☐ Cold-rolled spindle
- ☐ Nylon nut sets
- ☐ Carriage with slide blocks
- ☐ Pushbutton control unit with alarm signal
- ☐ Programmable top stop
- ☐ Electronic synchronization

Arms:
- ☐ Single telescopic front and rear arms, as standard
- ☐ Possibility of parallel parking of arms
- ☐ Internal arm locking system
- ☐ Low minimum height

Standard colours
- ☐ Arms: Red RAL 3020
- ☐ Posts: Grey RAL 7016

Illustrations are not binding and optional. Under reserve of dimensional, constructional and technical modifications! Validity 07/2016

Technical data	
Lifting capacity	3,200 kg
Lifting height	1,900 mm
Working height	1,995 - 2,025 mm
Lifting / lowering time	app. 40 Sec.
Motor	2 x 1.5 kw
Voltage	3 x 230/400V - 50 Hz - 25/16 A

Arm superstructure	
Lifting pad included in the delivery	P: 777112 (30 - 60 mm) CP: 777504 CF-08: 777395 + 660501
Min. height	95 mm
Drive-through width	2,110 - 2,310 mm
Width between posts	2,365 - 2,565 mm
Total width - outer edges posts	2,875 - 3,075 mm
Total width - outer edges base plates	3,120 - 3,320 mm
Total height post	2,706 mm
Total height inkl. portal	4,050 / 4,350 mm
Arm length front, min. - max.	F Std: 540 - 850 mm F DT: 480 - 840 mm
Arm length rear, min. - max.	900 - 1,425 mm

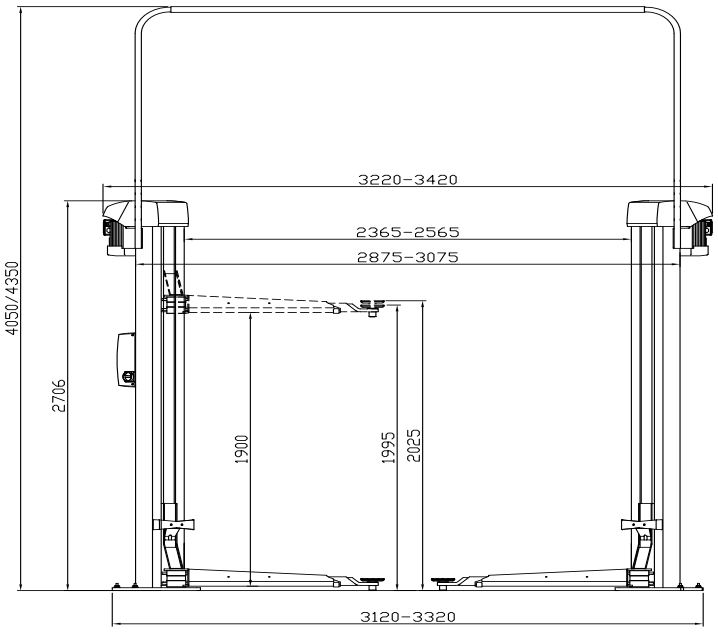

Scan the QR-Code for detailed product information.

Further Information on www.autopstenhoj.com

Versions:

- ☐ Available with different voltage

Installation:
- ☐ F = flex pad
- ☐ CF = combiflex pad
- ☐ CF-08 = combiflex 08 pad
- ☐ DT/- = double telescopic short arms, single telescopic long arms

Optional extras:

- ☐ Available with 2 different portal heights; alternatively in-ground kit
- ☐ LED-Lighting set
- ☐ Power pack
- ☐ Set of expansion bolts
- ☐ Extra control unit
- ☐ Large program of extra pads

Special colours available on request!



Application

- ☐ Repair and maintenance

Approvals

- ☐ Volkswagen Group



Maestro 32

Electro-mechanical 2-post lift, 3.2 t capacity

Description:

Posts:
- ☐ Asymmetric post installation
- ☐ Very stable bent posts
- ☐ Without base frame
- ☐ Two motors
- ☐ Cold-rolled spindle
- ☐ Nylon nut sets
- ☐ Carriage with slide blocks
- ☐ Pushbutton control unit with alarm signal
- ☐ Programmable top stop
- ☐ Electronic synchronization

Arms:
- ☐ Single telescopic front and rear arms, as standard
- ☐ Possibility of parallel parking of arms
- ☐ Internal arm locking system
- ☐ Low minimum height

Standard colours
- ☐ Arms: Red RAL 3020
- ☐ Posts: Grey RAL 7016

Illustrations are not binding and optional. Under reserve of dimensional, constructional and technical modifications! Validity 07/2016

Technical data	
Lifting capacity	3,500 kg
Lifting height	1,900 mm
Working height	1,995 - 2,025 mm
Lifting / lowering time	app. 40 Sec.
Motor	2 x 2.8 kw
Voltage	3 x 400V - 50 Hz - 25 A

Arm superstructure	
Lifting pad included in the delivery	P: 777395 CP: 777505 CF-08: 660501 + 777395
Min. height	95 mm
Drive-through width	2,290 mm
Width between posts	2,565 mm
Total width - outer edges posts	3,075 mm
Total width - outer edges base plates	3,320 mm
Total height post	2,706 mm
Total height inkl. portal	4,350 mm
Arm length front, min. - max.	F Std: 600 - 1,220 mm
Arm length rear, min. - max.	F Std: 900 - 1,425 mm F DT: 600 - 1,220 mm

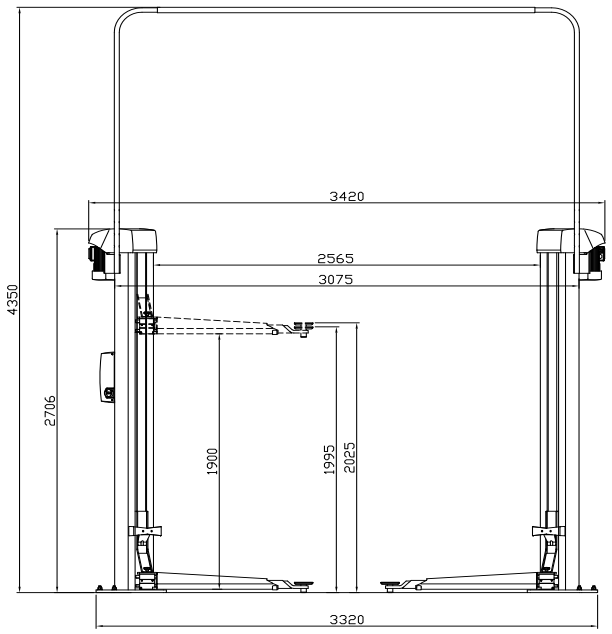

Scan the QR-Code for detailed product information.

Further Information on www.autopstenhoj.com

Versions:

- ☐ Available with 400 V / 3 phase, 50 cycles

Installation:
- ☐ F = flex pad
- ☐ CF = combiflex pad
- ☐ CF-08 = combiflex 08 pad

Optional extras:

- ☐ Available with 2 different portal heights; alternatively in-ground kit
- ☐ LED-Lighting set
- ☐ Power pack
- ☐ Set of expansion bolts
- ☐ Extra control unit
- ☐ Extension set for 2.35 F
- ☐ Large program of extra pads

Special colours available on request!



Application

- ☐ Repair and maintenance



Maestro 35

Electro-mechanical 2-post lift, 3.5 t capacity

Description:

Posts:
- ☐ Asymmetric post installation
- ☐ Very stable bent posts
- ☐ Without base frame
- ☐ Two motors
- ☐ Cold-rolled spindle
- ☐ Nylon nut sets
- ☐ Carriage with slide blocks
- ☐ Pushbutton control unit with alarm signal
- ☐ Programmable top stop
- ☐ Electronic synchronization

Arms:
- ☐ Single telescopic front and double telescopic rear arms, as standard
- ☐ Possibility of parallel parking of arms
- ☐ Internal arm locking system
- ☐ Low minimum height

Standard colours
- ☐ Arms: Red RAL 3020
- ☐ Posts: Grey RAL 7016

Illustrations are not binding and optional. Under reserve of dimensional, constructional and technical modifications! Validity 07/2016

Technical data	
Lifting capacity	3,000 kg
Lifting height	1,900 mm
Working height	1,995 - 2,025 mm
Lifting / lowering time	app. 40 Sec.
Motor	2 x 1.5 kW
Voltage	3 x 230/400V - 50 Hz - 35/25 A

Arm superstructure	
Lifting pad included in the delivery	P: 777395 (25 - 55 mm) CP: 777539 (25 - 190 mm)
Min. height	95 mm
Drive-through width	2,120 - 2,320 mm
Width between posts	2,380 - 2,580 mm
Total width - outer edges posts	2,920 - 3,120 mm
Total width - outer edges base plates	3,286 - 3,486 mm
Total height post	2,690 mm
Total height inkl. portal	4,050 / 4,350 mm
Arm length front, min. - max.	F Std: 540 - 850 mm F DT: 480 - 840 mm
Arm length rear, min. - max.	F Std1: 900 - 1,425 mm F Std2: 800 - 1,250 mm

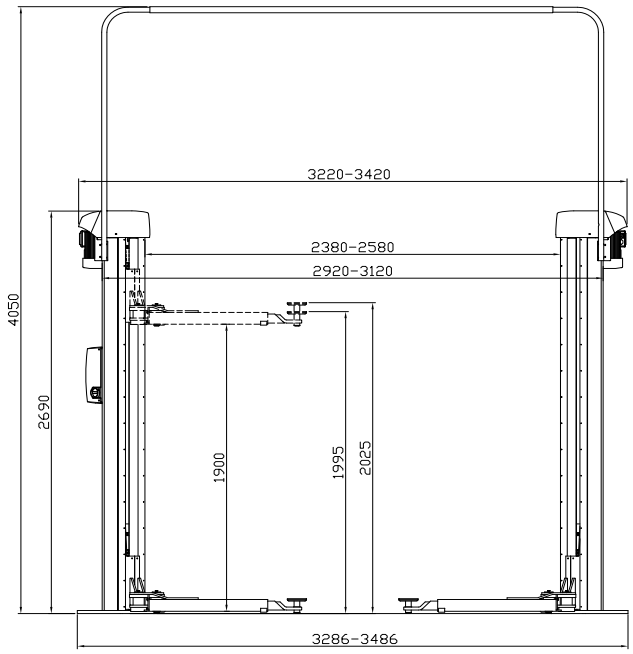

Scan the QR-Code for detailed product information.

Further Information on www.autopstenhoj.com

Versions:

- ☐ Available with different Voltage

Installation:
- ☐ F = flex pad
- ☐ CF-08 = combiflex 08 pad

Optional extras:

- ☐ Available with 2 different portal heights; alternatively in-ground kit
- ☐ LED-Lighting set
- ☐ Power pack
- ☐ Set of expansion bolts
- ☐ Extra control unit
- ☐ Long door stops
- ☐ Wheel holders
- ☐ Large program of extra pads

Special colours available on request!



Application

- ☐ Repair and maintenance

Approvals

- ☐ Renault

Maestro 2.30

Electro-mechanical 2-post lift, 3.0 t capacity

Description:

Posts:
- ☐ Asymmetric post installation
- ☐ Very stable welded posts
- ☐ Without base frame
- ☐ Two motors
- ☐ Cold-rolled spindle
- ☐ Nylon nut sets
- ☐ Carriage with 6 guiding wheels and lubrication-free roller bearings
- ☐ Pushbutton control unit with alarm signal
- ☐ Programmable top stop
- ☐ Electronic synchronization

Arms:
- ☐ Single telescopic front and rear arms, as standard
- ☐ Possibility of parallel parking of arms
- ☐ Internal arm locking system
- ☐ Low minimum height

Standard colours
- ☐ Arms: Red RAL 3020
- ☐ Posts: Grey RAL 7016

Illustrations are not binding and optional. Under reserve of dimensional, constructional and technical modifications! Validity 07/2016

Technical data	
Lifting capacity	3,200 kg
Lifting height	1,900 mm
Working height	1,995 - 2,150 mm
Lifting / lowering time	app. 40 Sec.
Motor	2 x 1.5 kW
Voltage	3 x 230/400V - 50 Hz - 35/25 A

Arm superstructure	
Lifting pad included in the delivery	P: 777395 (25 - 55 mm) CF-08: 777395 (25 - 180 mm)
Min. height	95 mm
Drive-through width	2,120 - 2,320 mm
Width between posts	2,380 - 2,580 mm
Total width - outer edges posts	2,920 - 3,120 mm
Total width - outer edges base plates	3,286 - 3,486 mm
Total height post	2,713 mm
Total height inkl. portal	4,050 / 4,350 mm
Arm length front, min. - max.	F Std: 540 - 850 mm F DT: 480 - 840 mm
Arm length rear, min. - max.	F Std1: 900 - 1,425 mm F Std2: 800 - 1,250 mm

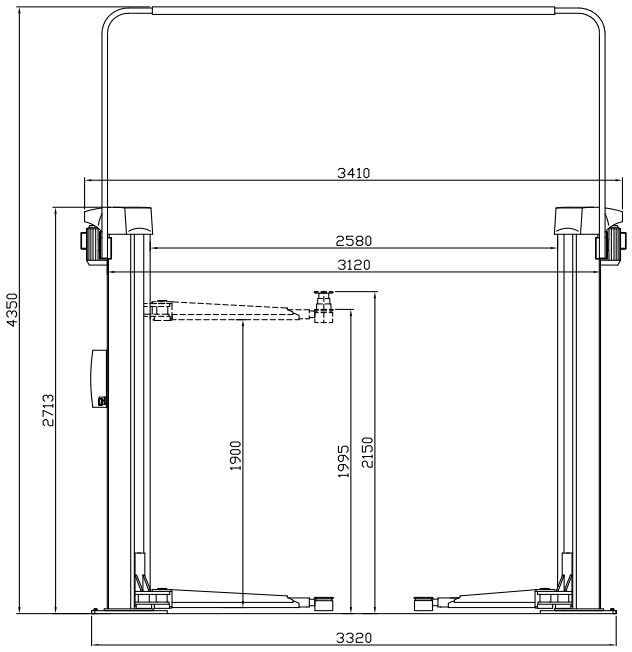

Scan the QR-Code for detailed product information.

Further Information on www.autopstenhoj.com

Versions:

- ☐ Available with different Voltage

Installation:
- ☐ F = flex pad
- ☐ CF-08 = combiflex 08 pad

Optional extras:

- ☐ Available with 2 different portal heights; alternatively in-ground kit
- ☐ LED-Lighting set
- ☐ Power pack
- ☐ Set of expansion bolts
- ☐ Extra control unit
- ☐ Long door stops
- ☐ Wheel holders
- ☐ Extension set for 2.35 F
- ☐ Large program of extra pads

Special colours available on request!



Application

- ☐ Repair and maintenance

Approvals

- ☐ Jaguar
- ☐ Renault

Maestro 2.32

Electro-mechanical 2-post lift, 3.2 t capacity

Description:

Posts:
- ☐ Asymmetric post installation
- ☐ Very stable welded posts
- ☐ Without base frame
- ☐ Two motors
- ☐ Cold-rolled spindle
- ☐ Nylon nut sets
- ☐ Carriage with 6 guiding wheels and lubrication-free roller bearings
- ☐ Pushbutton control unit with alarm signal
- ☐ Programmable top stop
- ☐ Electronic synchronization

Arms:
- ☐ Single telescopic front and rear arms, as standard
- ☐ Possibility of parallel parking of arms
- ☐ Internal arm locking system
- ☐ Low minimum height

Standard colours
- ☐ Arms: Red RAL 3020
- ☐ Posts: Grey RAL 7016

Illustrations are not binding and optional. Under reserve of dimensional, constructional and technical modifications! Validity 07/2016

Technical data	
Lifting capacity	3,500 kg
Lifting height	1,900 mm
Working height	1,995 - 2,150 mm
Lifting / lowering time	app. 35 Sec.
Motor	2 x 2.8 kw
Voltage	3 x 230/400V - 50 Hz - 35/25 A

Arm superstructure	
Lifting pad included in the delivery	P: 777395 (25 - 55 mm) CF-08: 777395
Min. height	95 mm
Drive-through width	2,290 mm
Width between posts	2,580 mm
Total width - outer edges posts	3,120 mm
Total width - outer edges base plates	3,320 mm
Total height post	2,713 mm
Total height inkl. portal	4,350 mm
Arm length front, min. - max.	F Std: 600 - 1,200 mm
Arm length rear, min. - max.	F Std1: 900 - 1,425 mm F Std2: 600 - 1,220 mm

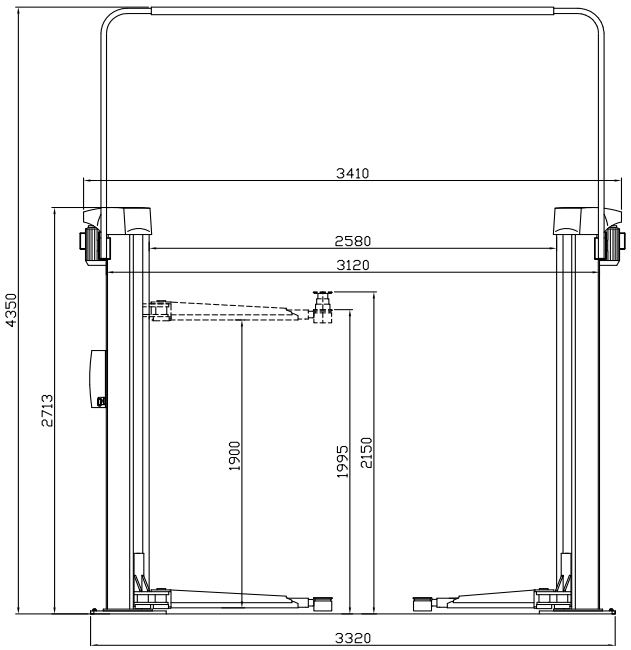

Scan the QR-Code for detailed product information.

Further Information on www.autopstenhoj.com

Versions:

- ☐ Available with different Voltage

Installation:
- ☐ F = flex pad
- ☐ CF-08 = combiflex 08 pad

Optional extras:

- ☐ Available with 2 different portal heights; alternatively in-ground kit
- ☐ LED-Lighting set
- ☐ Power pack
- ☐ Set of expansion bolts
- ☐ Extra control unit
- ☐ Long door stops
- ☐ Wheel holders
- ☐ Extension set for 2.35 F
- ☐ Large program of extra pads

Special colours available on request!



Application

- ☐ Repair and maintenance

Approvals

- ☐ Renault

Maestro 2.35

Electro-mechanical 2-post lift, 3.5 t capacity

Description:

Posts:
- ☐ Asymmetric post installation
- ☐ Very stable welded posts
- ☐ Without base frame
- ☐ Two motors
- ☐ Cold-rolled spindle
- ☐ Nylon nut sets
- ☐ Carriage with 6 guiding wheels and lubrication-free roller bearings
- ☐ Pushbutton control unit with alarm signal
- ☐ Programmable top stop
- ☐ Electronic synchronization

Arms:
- ☐ Single telescopic front and double telescopic rear arms, as standard
- ☐ Possibility of parallel parking of arms
- ☐ Internal arm locking system
- ☐ Low minimum height

Standard colours
- ☐ Arms: Red RAL 3020
- ☐ Posts: Grey RAL 7016

Illustrations are not binding and optional. Under reserve of dimensional, constructional and technical modifications! Validity 07/2016

Technical data	
Lifting capacity	3,500 kg
Lifting height	1,900 mm
Working height	1,970 - 1,995 mm
Lifting / lowering time	app. 35 Sec.
Motor	2 x 2.8 kw
Voltage	3 x 230/400V - 50 Hz - 35/25 A

Arm superstructure	
Lifting pad included in the delivery	29265 (25 - 50 mm)
Min. height	70 mm
Drive-through width	2,400 mm
Lichte Weite zwischen den Säulen	2,700 mm
Total width - outer edges posts	3,242 mm
Total width an den Fußplatten	3,500 mm
Total height post	2,713 mm
Total height inkl. portal	4,350 mm
Arm length front, min. - max.	707 - 1,443 mm
Arm length rear, min. - max.	707 - 1,443 mm

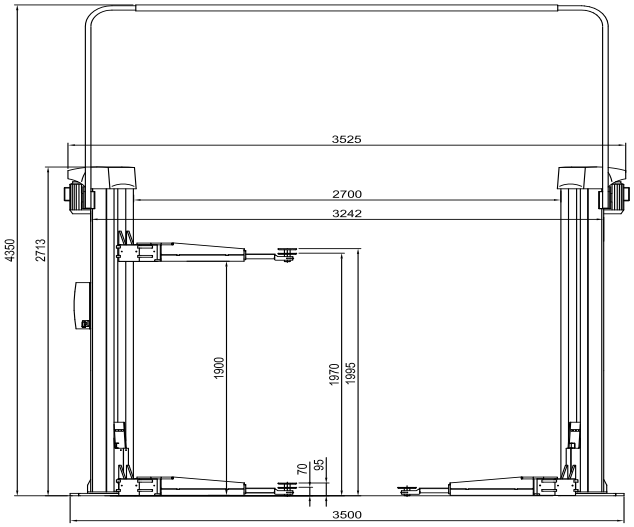

Scan the QR-Code for detailed product information.

Further Information on www.autopstenhoj.com

Versions:

- ☐ Available with different Voltage

Installation:
- ☐ F = flex pad

Optional extras:

- ☐ Available with 2 different portal heights; alternatively in-ground kit
- ☐ LED-Lighting set
- ☐ Power pack
- ☐ Set of expansion bolts
- ☐ Extra control unit
- ☐ Long door stops
- ☐ Wheel holders
- ☐ Set of 4 wheel forks (400 mm)
- ☐ Large program of extra pads

Special colours available on request!



Application

- ☐ Repair and maintenance

Approvals

- ☐ Mercedes-Benz
- ☐ Renault
- ☐ Volkswagen Group

Maestro 2.35 Sport

Electro-mechanical 2-post lift, 3.5 t capacity

Description:

Posts:
- ☐ Asymmetric post installation
- ☐ Very stable bent posts
- ☐ Without base frame
- ☐ Two motors
- ☐ Cold-rolled spindle
- ☐ Nylon nut sets
- ☐ Carriage with 6 guiding wheels and lubrication-free roller bearings
- ☐ Pushbutton control unit with alarm signal
- ☐ Programmable top stop
- ☐ Electronic synchronization

Arms:
- ☐ Single telescopic front and double telescopic rear arms, as standard
- ☐ Internal arm locking system
- ☐ Low minimum height

Standard colours
- ☐ Arms: Red RAL 3020
- ☐ Posts: Grey RAL 7016

Illustrations are not binding and optional. Under reserve of dimensional, constructional and technical modifications! Validity 07/2016

Technical data	
Lifting capacity	5,000 kg
Lifting height	1,900 mm
Working height	F Sport: 2,022 - 2,052 mm FL: 2,040 - 2,070 mm
Lifting / lowering time	app. 55 Sec.
Motor	2 x 2.8 kw
Voltage	3 x 230/400V - 50 Hz - 35/25 A

Arm superstructure	
Lifting pad included in the delivery	770505 (30 - 60 mm)
Min. height	F Sport: 122 mm FL: 140 mm
Drive-through width	2,800 - 3,000 mm
Width between posts	3,185 - 3,385 mm
Total width - outer edges posts	3,560 - 3,760 mm
Total width - outer edges base plates	3,910 - 4,110 mm
Total height post	2,908 mm
Total height inkl. portal	4,910 - 5,270 mm
Arm length front, min. - max.	F Sport: 875 - 1,930 mm FL: 957 - 2,138 mm
Arm length rear, min. - max.	F Sport: 875 - 1,930 mm FL: 957 - 2,138 mm

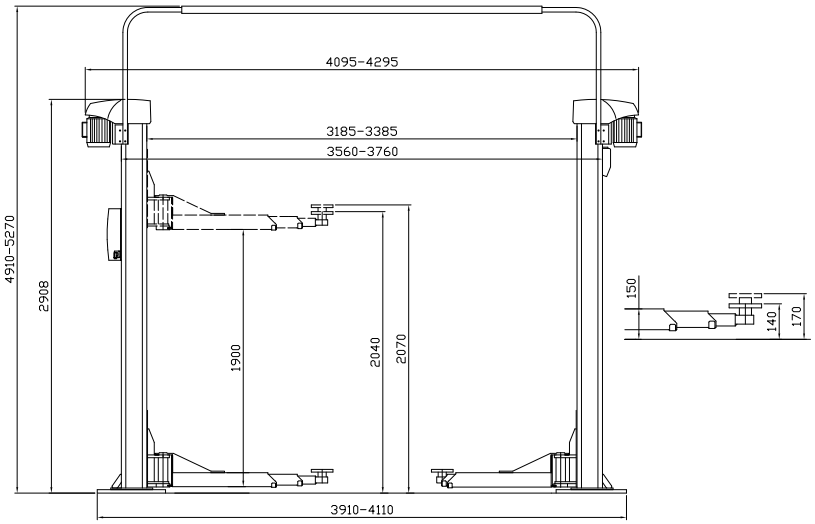

Scan the QR-Code for detailed product information.

Further Information on www.autopstenhoj.com

Versions:

- ☐ Available with different Voltage

Installation:
- ☐ F = flex pad
- ☐ L = long arms

Optional extras:

- ☐ Available with portal or in-ground kit
- ☐ LED-Lighting set
- ☐ Power pack
- ☐ Set of expansion bolts
- ☐ Extra control unit
- ☐ Long door stops
- ☐ Wheel holders
- ☐ Set of 4 wheel forks (400 mm)
- ☐ Large program of extra pads

Special colours available on request!





Application

- ☐ Repair and maintenance

Approvals

- ☐ BMW / Mini
- ☐ Renault

Maestro 2.50

Electro-mechanical 2-post lift, 5 t capacity

Description:

Posts:
- ☐ Symmetric post installation
- ☐ Very stable bent posts
- ☐ Without base frame
- ☐ Two motors
- ☐ Cold-rolled spindle
- ☐ Nylon nut sets
- ☐ Carriage with 6 guiding wheels and lubrication-free roller bearings
- ☐ Pushbutton control unit with alarm signal
- ☐ Programmable top stop
- ☐ Electronic synchronization

Arms:
- ☐ 4 double telescopic arms
- ☐ Internal arm locking system
- ☐ Low minimum height

Standard colours
- ☐ Arms: Red RAL 3020
- ☐ Posts: Grey RAL 7016

Illustrations are not binding and optional. Under reserve of dimensional, constructional and technical modifications! Validity 07/2016

Technical data	
Lifting capacity	5,500 kg
Lifting height	1,900 mm
Working height	2,040 - 2,070 mm
Lifting / lowering time	app. 55 Sec.
Motor	2 x 2.8 kw
Voltage	3 x 230/400V - 50 Hz - 35/25 A

Arm superstructure	
Lifting pad included in the delivery	770505 (30 - 60 mm)
Min. height	140 mm
Drive-through width	2,800 - 3,000 mm
Width between posts	3,185 - 3,385 mm
Total width - outer edges posts	3,560 - 3,760 mm
Total width - outer edges base plates	3,910 - 4,110 mm
Total height post	2,908 mm
Total height inkl. portal	4,910 - 5,270 mm
Arm length front, min. - max.	957 - 1,900 mm
Arm length rear, min. - max.	957 - 1,900 mm

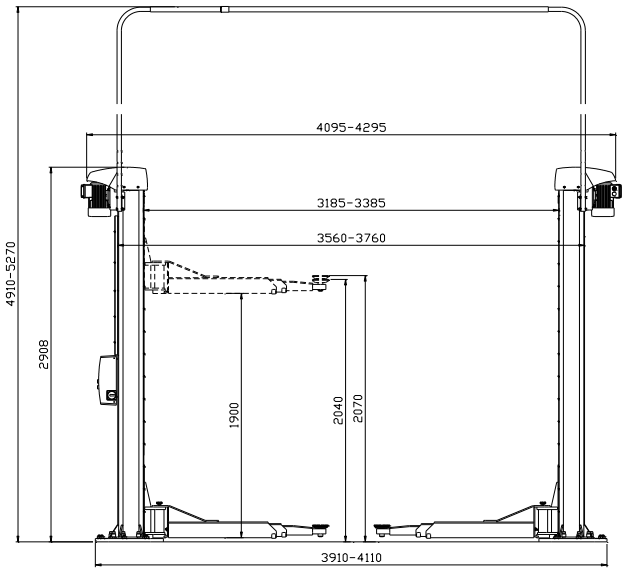

Scan the QR-Code for detailed product information.

Further Information on www.autopstenhoj.com

Versions:

☐ Available with different Voltage

Installation:
☐ F = flex pad

Optional extras:

☐ Available with portal or in-ground kit
☐ LED-Lighting set
☐ Power pack
☐ Set of expansion bolts
☐ Extra control unit
☐ Long door stops
☐ Wheel holders
☐ Large program of extra pads

Special colours available on request!!



Application

☐ Repair and maintenance

Approvals

☐ Volkswagen Group

Maestro 2.55

Electro-mechanical 2-post lift, 5.5 t capacity

Description:

Posts:
- ☐ Asymmetric post installation
- ☐ Very stable bent posts
- ☐ Without base frame
- ☐ Two motors
- ☐ Cold-rolled spindle
- ☐ Nylon nut sets
- ☐ Carriage with 6 guiding wheels and lubrication-free roller bearings
- ☐ Pushbutton control unit with alarm signal
- ☐ Programmable top stop
- ☐ Electronic synchronization

Arms:
- ☐ 4 double telescopic arms
- ☐ Internal arm locking system
- ☐ Low minimum height

Standard colours
- ☐ Arms: Red RAL 3020
- ☐ Posts: Grey RAL 7016

Illustrations are not binding and optional. Under reserve of dimensional, constructional and technical modifications! Validity 07/2016

Technical data	
Lifting capacity	6,500 kg
Lifting height	1,900 mm
Working height	2,060 - 2,110 mm
Lifting / lowering time	app. 45 Sec.
Motor	2 x 4.0 kW
Voltage	3 x 230/400V - 50 Hz - 35/25 A

Arm superstructure	
Lifting pad included in the delivery	11028 (90 - 150 mm)
Min. height	145 mm
Drive-through width	2,829 mm
Width between posts	3,170 mm
Total width - outer edges posts	3,560 mm
Total width - outer edges base plates	4,000 mm
Total height post	2,908 mm
Total height inkl. portal	4,910 - 5,270 mm
Arm length front, min. - max.	770 - 1,640 mm
Arm length rear, min. - max.	770 - 1,640 mm

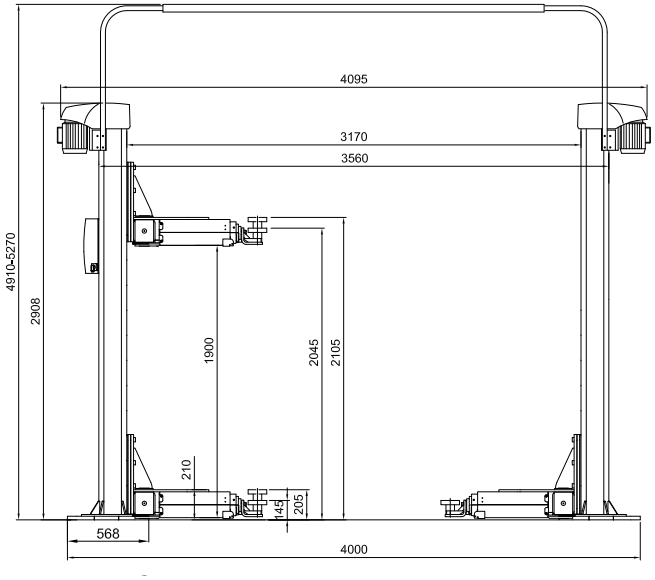

Scan the QR-Code for detailed product information.

Further Information on www.autopstenhoj.com

Versions:

- ☐ Available with different Voltage

Installation:
- ☐ F = flex pad

Optional extras:

- ☐ Available with portal or in-ground kit
- ☐ LED-Lighting set
- ☐ Power pack
- ☐ Set of expansion bolts
- ☐ Extra control unit
- ☐ Long door stops
- ☐ Wheel holders
- ☐ Large program of extra pads

Special colours available on request!



Application

- ☐ Repair and maintenance

Approvals

- ☐ Mercedes-Benz
- ☐ Volkswagen Group

Maestro 2.65

Electro-mechanical 2-post lift, 6.5 t capacity

Description:

Posts:
- ☐ Symmetric post installation
- ☐ Very stable bent posts
- ☐ Without base frame
- ☐ Two motors
- ☐ Cold-rolled spindle
- ☐ Nylon nut sets
- ☐ Carriage with 6 guiding wheels and lubrication-free roller bearings
- ☐ Pushbutton control unit with alarm signal
- ☐ Programmable top stop
- ☐ Electronic synchronization

Arms:
- ☐ 4 double telescopic arms
- ☐ Internal arm locking system
- ☐ Low minimum height

Standard colours
- ☐ Arms: Red RAL 3020
- ☐ Posts: Grey RAL 7016

Illustrations are not binding and optional. Under reserve of dimensional, constructional and technical modifications! Validity 07/2016

Technical data	
Lifting capacity	3,500 kg
Lifting height	1,815 mm
Working height	1,950 mm
Lifting / lowering time	30 Sec.
Pump unit	1x 2.2 kW
Voltage	3x230/400 V-50/60Hz - 16 A

Arm superstructure	
Lifting pad included in the delivery	P: (90 - 135 mm)
Min. height	90 mm
Drive-through width	BMW: 2,250 mm Uni: 2,450 mm
Width between posts	3,170 mm
Total width - outer edges base plates	BMW: 3,245 mm Uni: 3,495 mm
Total height inkl. portal	4,265 mm
Arm length front, min. - max.	F BMW: 590 - 995 mm F Uni: 640 - 1,145 mm
Arm length rear, min. - max.	F BMW: 710 - 1,275 mm F Uni: 880 - 1,560 mm

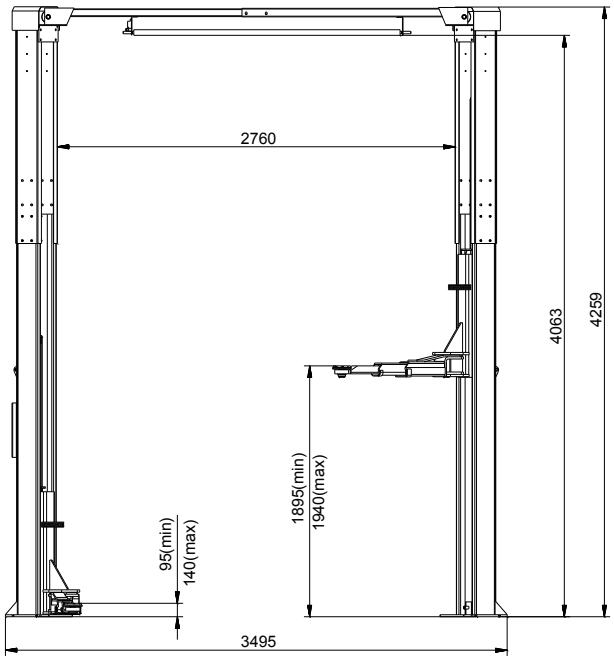

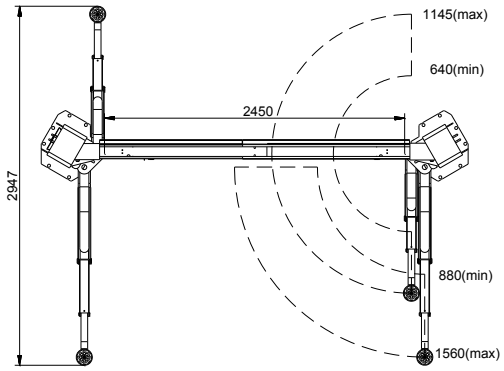

Scan the QR-Code for detailed product information.

Further Information on www.autopstenhoj.com

Versions:

- ☐ Available with different Voltage
- ☐ BMW- and Universal armset available

Optional extras:

- ☐ Available with different portal heights
- ☐ Set of expansion bolts
- ☐ Extra control unit
- ☐ A large program of lifting pads

Special colours available on request!



Application

- ☐ Repair and maintenance

Approvals

- ☐ BMW
- ☐ Volkswagen Group

Magnat 35

Electro-hydraulic 2-post lift, 3.5 t capacity

Description:

Posts:
- ☐ Asymmetric post installation for ideal door-opening angle
- ☐ Very stable bent posts
- ☐ Without base frame
- ☐ One hydraulic unit
- ☐ Carriage with slide blocks
- ☐ Pushbutton control unit with alarm signal
- ☐ Adjustable top stop
- ☐ Mechanic synchronization
- ☐ Safety ratchet

Arms:
- ☐ Double telescopic front and single telescopic rear arms, as standard
- ☐ Possibility of parallel parking of arms
- ☐ Automatic arm locking system
- ☐ Low minimum height

Standard colours
- ☐ Arms: Red RAL 3020
- ☐ Posts: Grey RAL 7016

Illustrations are not binding and optional. Under reserve of dimensional, constructional and technical modifications! Validity 07/2016

Technical data	
Lifting capacity	4,000 kg
Lifting height	1,670 mm
Working height	1,810 mm
Lifting / lowering time	Standard: 24 / 26 Sec. D: 16 / 26 Sec.
Pump unit	Standard: 3.0 kW D: 2 x 3.0 kW
Voltage	3x230/400V - 50 Hz - 25/16 A

Platforms	
Total length	5,060 / 5,560 mm
Usable length of platform	4,180 / 4,680 mm
Wheel base, min. - max.	variabel
Platform width	500 mm
Distance between platforms	740 - 1,030 mm
Min. height	140/160 mm
Width between posts	2,600 mm
Total width - outer edges base plates	3,022 mm
Total height	2,233 mm

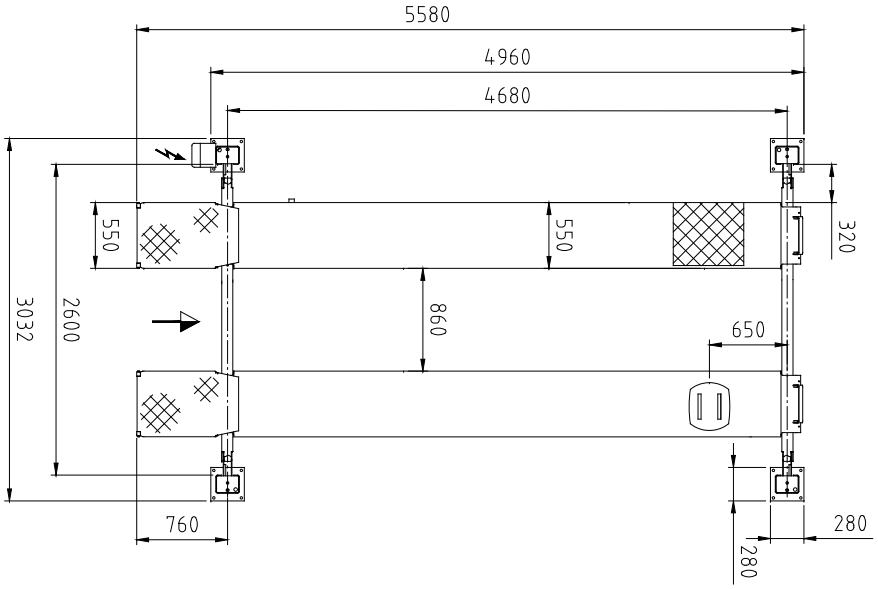

Scan the QR-Code for detailed product information.

Further Information on www.autopstenhoj.com

Versions:

- Available with different Voiltage
- Drive-on ramps and stops for surface-mounting, alternatively drive-over ramps for recessed installation

Installation:
- S = flush platforms
- W = with front recesses for turn tables and rear side slip plates
- G = galvanized platforms
- 42 = 4,200 mm platforms
- 47 = 4,700 mm platforms
- 51 = 5,100 mm platforms

Inspection lifts:
As standard equipped with re-inforced posts and larger cable diameter for intensive usage in inspection centres. As standard delivered with:
P = play detector (pneumatically operated for both lateral and rotational movement, for axle load up to 3 t), operation with wireless hand lamp
Option:
D = double pump unit for quicker lifting time. Control unit on front left post

MOT / ATL lifts:
Worldwide accepted inspection lifts which have been specified and constructed according to UK MOT and ATL (automated test lanes VOSA) requirements. Both MOT / ATL lifts are as standard delivered with front recesses with turntables and extra control unit for operation from front right post; ATL lifts furthermore equipped with re-inforced posts and larger cable diameter and:
P = play detector (pneumatically operated for both lateral and rotational movement, for axle load up to 3 t), operation with wireless hand lamp

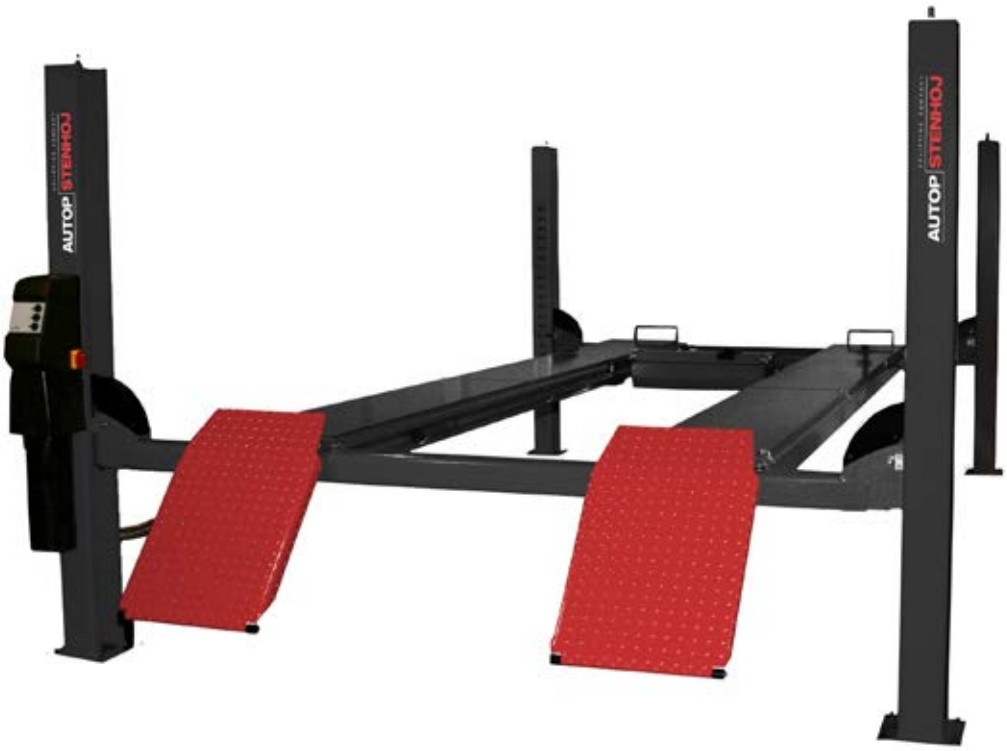

Application

- ☐ Check-in
- ☐ Repair and maintenance
- ☐ Wheel alignment
- ☐ Testing equipment

Approvals

- ☐ Major 4026-47 S: Volvo
- ☐ Major 4026-47 W: Volvo

Major 4026

Electro-hydraulic 4-post lift, 4 t capacity

Description:

Posts:
- ☐ Integrated eccentric brake system
- ☐ Emergency stop valve
- ☐ Obstruction system
- ☐ Pneumatic parking system in height adjustable ratchets
- ☐ Pump and control unit on rear left post
- ☐ Pushbutton control unit with alarm signal
- ☐ Hydraulic cylinder under left platform
- ☐ Lifting and lowering by means of cables
- ☐ Emergency lowering valve

Superstructure:
- ☐ One movable platform as standard
- ☐ Platforms prepared for AUTOPSTENHOJ Scissor jack Micro

Standard colours
- ☐ Platforms & posts: Grey RAL 7016
- ☐ Ramps: Red RAL 3020

Optional extras:

- ☐ Set of expansion bolts
- ☐ Extra control unit
- ☐ LED-Lighting set
- ☐ Set of two cover plates for recesses
- ☐ Set of two 385 mm ramp extensions
- ☐ Set of two platform extensions (0.5 m)

Special colours available on request!

Illustrations are not binding and optional. Under reserve of dimensional, constructional and technical modifications! Validity 07/2016

Technical data	
Lifting capacity	4,000 kg
Lifting height	1,670 mm
Working height	1,810 mm
Lifting / lowering time	Standard: 24 / 26 Sec. D: 16 / 26 Sec.
Pump unit	Standard: 3.0 kW D: 2 x 3.0 kW
Voltage	3x230/400V-50 Hz - 25/16 A

Platforms	
Total length	5,560 / 5,980 mm
Usable length of platform	4,680 / 5,100 mm
Wheel base, min. - max.	variabel
Platform width	550 mm
Distance between platforms	805 - 1,285 mm
Min. height	140/160 mm
Width between posts	3,000 mm
Total width - outer edges posts	3,422 mm
Total height	2,233 mm

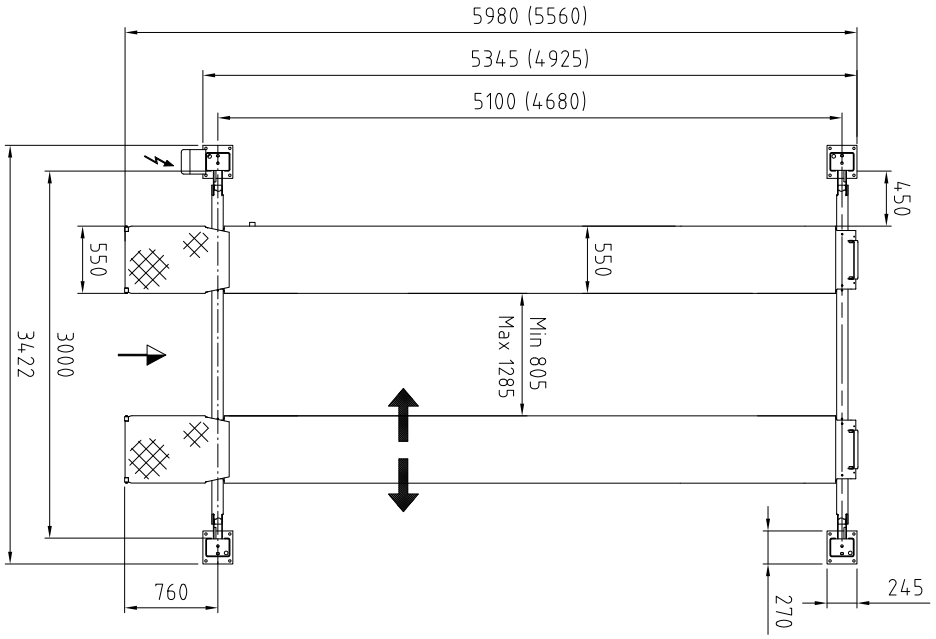

Scan the QR-Code for detailed product information.

Further Information on www.autopstenhoj.com

Versions:

- ☐ Available with different Voltage
- ☐ Drive-on ramps and stops for surface-mounting, alternatively drive-over ramps for recessed installation

Installation:
- ☐ S = flush platforms
- ☐ W = with front recesses for turn tables and rear side slip plates
- ☐ G = galvanized platforms
- ☐ 42 = 4,200 mm platforms
- ☐ 47 = 4,700 mm platforms
- ☐ 51 = 5,100 mm platforms

Inspection lifts:
As standard equipped with re-inforced posts and larger cable diameter for intensive usage in inspection centres. As standard delivered with:
P = play detector (pneumatically operated for both lateral and rotational movement, for axle load up to 3 t), operation with wireless hand lamp
Option:
D = double pump unit for quicker lifting time. Control unit on front left post

MOT / ATL lifts:
Worldwide accepted inspection lifts which have been specified and constructed according to UK MOT and ATL (automated test lanes VOSA) requirements. Both MOT / ATL lifts are as standard delivered with front recesses with turntables and extra control unit for operation from front right post; ATL lifts furthermore equipped with re-inforced posts and larger cable diameter and:
P = play detector (pneumatically operated for both lateral and rotational movement, for axle load up to 3 t), operation with wireless hand lamp

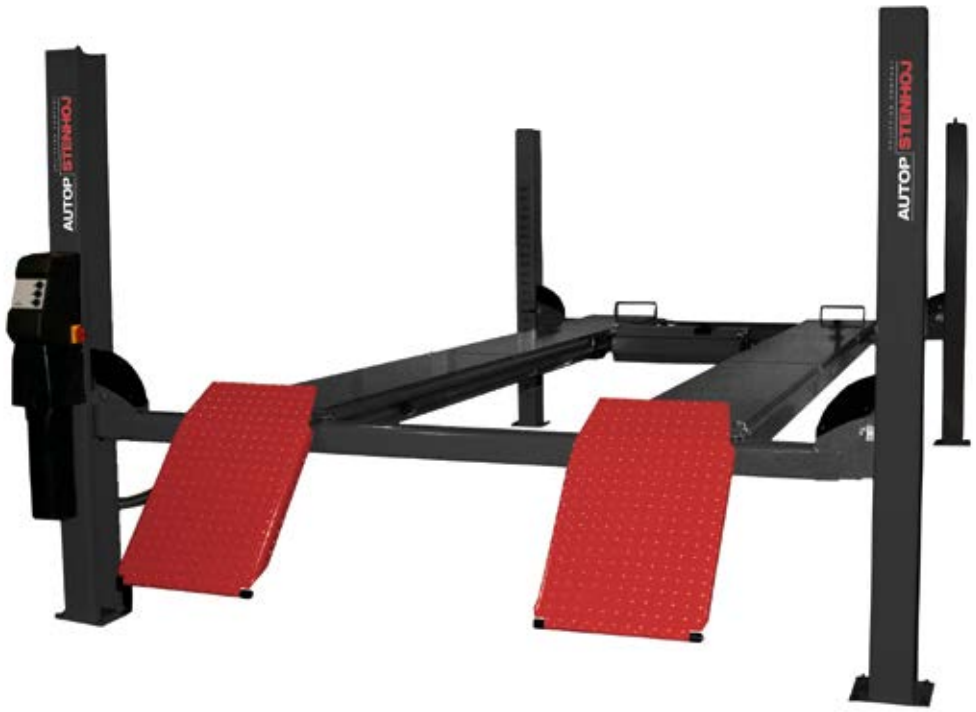

Application

- ☐ Check-in
- ☐ Repair and maintenance
- ☐ Wheel alignment
- ☐ Testing equipment

Approvals

- ☐ Jaguar
- ☐ Landrover

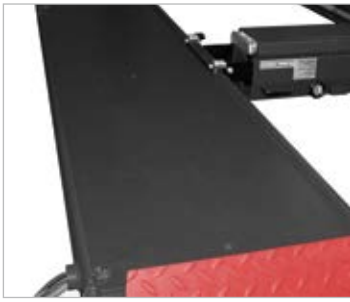

Major 4030

Electro-hydraulic 4-post lift, 4 t capacity

Description:

Posts:
- ☐ Integrated eccentric brake system
- ☐ Emergency stop valve
- ☐ Obstruction system
- ☐ Pneumatic parking system in height adjustable ratchets
- ☐ Pump and control unit on rear left post
- ☐ Pushbutton control unit with alarm signal
- ☐ Hydraulic cylinder under left platform
- ☐ Lifting and lowering by means of cables
- ☐ Emergency lowering valve

Superstructure:
- ☐ One movable platform as standard
- ☐ Platforms prepared for AUTOPSTENHOJ Scissor jack Micro

Standard colours
- ☐ Platforms & posts: Grey RAL 7016
- ☐ Ramps: Red RAL 3020

Optional extras:

- ☐ Set of expansion bolts
- ☐ Extra control unit
- ☐ LED-Lighting set
- ☐ Set of two cover plates for recesses
- ☐ Set of two 385 mm ramp extensions
- ☐ Set of two platform extensions (0.5 m)

Special colours available on request!

Illustrations are not binding and optional. Under reserve of dimensional, constructional and technical modifications! Validity 07/2016

Technical data	
Lifting capacity	4,000 kg
Lifting height	1,670 mm
Working height	1,860 mm
Lifting / lowering time	35 Sec.
Pump unit	3.0 kW
Voltage	3x230/400V-50 Hz - 25/16 A

Platforms	
Total length	4,840 mm
Usable length of platform	4,400 mm
Wheel base, min. - max.	variabel
Platform width	680 mm
Distance between platforms	930 mm
Min. height	190 mm
Width between posts	3,000 mm
Total width - outer edges posts	3,432 mm
Total height	2,233 mm

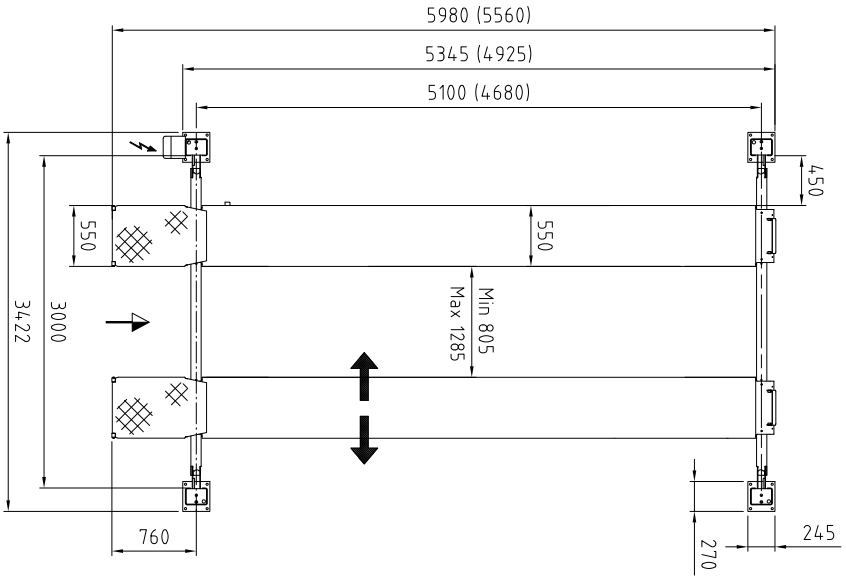

Scan the QR-Code for detailed product information.

Further Information on www.autopstenhoj.com

Versions:

- Available with different Voltage
- Drive-on ramps and stops for surface-mounting, alternatively drive-over ramps for recessed installation

Installation:

- WL = with front recesses for turn tables and rear side slip plates, center cover plate between recesses and side slip platess
- 44 = 4,400 mm platforms

Optional extras:

- Set of expansion bolts
- Extra control unit
- LED-Lighting set
- Set of two cover plates for recesses
- Set of two 385 mm ramp extensions
- Set of two platform extensions (0.5 m)

Special colours available on request!

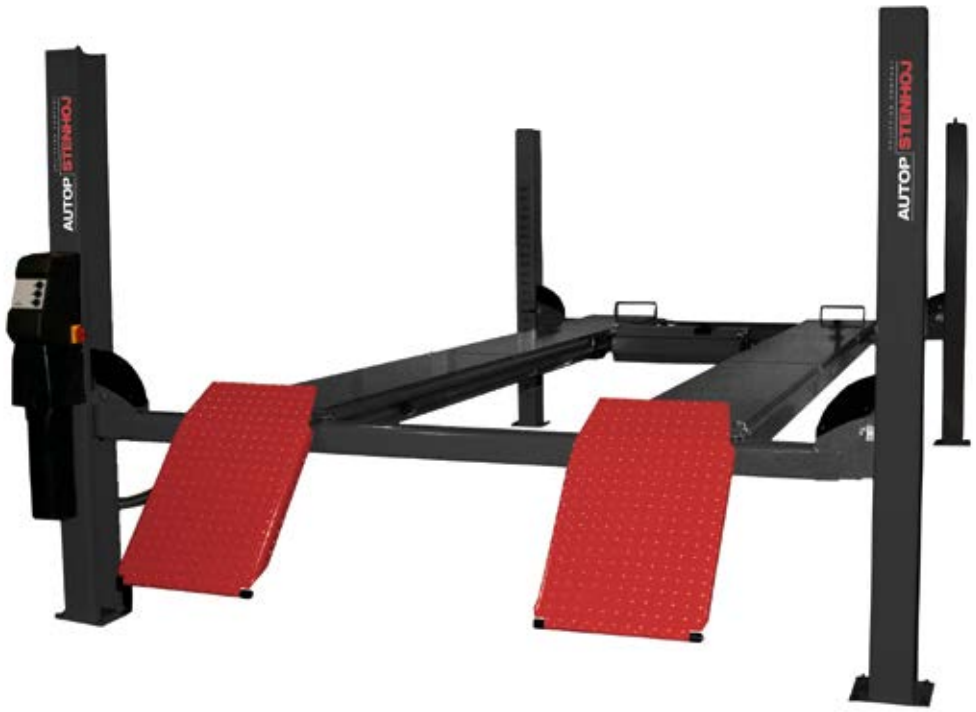

Application

- ☐ Check-in
- ☐ Repair and maintenance
- ☐ Wheel alignment
- ☐ Testing equipment

Approvals

- ☐ BMW / Mini

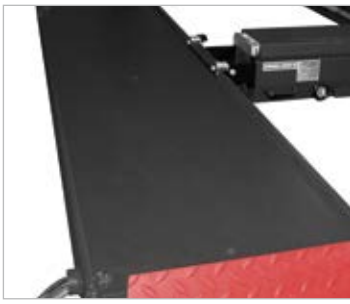

Major 4030-44 WL DLX

Electro-hydraulic 4-post lift, 4 t capacity

Description:

Posts:
- ☐ Integrated eccentric brake system
- ☐ Emergency stop valve
- ☐ Obstruction system
- ☐ Pneumatic parking system in height adjustable ratchets
- ☐ Pump and control unit on rear left post
- ☐ Pushbutton control unit with alarm signal
- ☐ Hydraulic cylinder under left platform
- ☐ Lifting and lowering by means of cables
- ☐ Emergency lowering valve

Superstructure:
- ☐ One movable platform as standard
- ☐ Platforms prepared for AUTOPSTENHOJ Scissor jack Micro

Standard colours
- ☐ Platforms & posts: Grey RAL 7016
- ☐ Ramps: Red RAL 3020

Illustrations are not binding and optional. Under reserve of dimensional, constructional and technical modifications! Validity 07/2016

Technical data	
Lifting capacity	5,000 kg
Lifting height	1,670 mm
Working height	1,878 mm
Lifting / lowering time	app. 33/24 Sec.
Pump unit	3.0 kW
Voltage	3x230/400V - 50 Hz - 25/16 A

Free-wheel device	
Lifting capacity	3,500 kg
Length	1,450 – 2,200 mm
Lifting height	425 mm
Drive-over height	0 mm
Lifting / lowering time	9/12 Sec.
Operation	hydraulic

Platforms	
Total length	6,810 mm
Usable length of platform	5,290 mm
Wheel base, min. - max.	variabel
Platform width	560 mm
Distance between platforms	935 - 985 mm
Min. height	200/208 mm
Width between posts	3,000 mm
Total width - outer edges posts	3,432 mm
Total height	2,233 mm

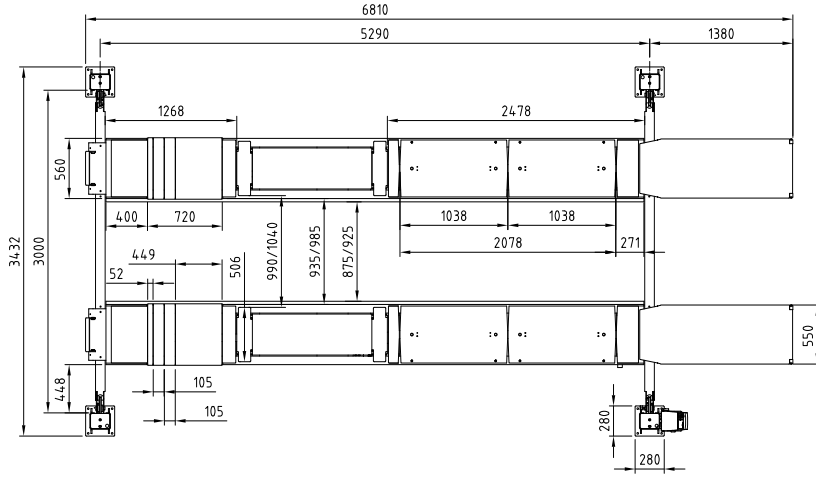

Scan the QR-Code for detailed product information.

Further Information on www.autopstenhoj.com

Versions:

- Available with different Voltage
- Drive-on ramps and stops for surface-mounting, alternatively drive-over ramps for recessed installation

Installation:

- W = with front recesses for turn tables and rear side slip plates
- 53 = 5,300 mm Platforms

Optional extras:

- Set of expansion bolts
- LED-Lighting set

Special colours available on request!



Application

- ☐ Check-in
- ☐ Repair and maintenance
- ☐ Wheel alignment
- ☐ Testing equipment

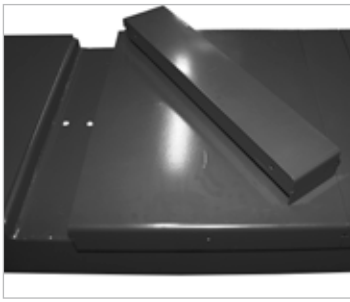

Major 5030–53 W Combi

Electro-hydraulic 4-post lift, 5 t capacity and integrated Free-wheel device

Description:

Post:
- ☐ Integrated eccentric brake system
- ☐ Emergency stop valve
- ☐ Obstruction system
- ☐ Pneumatic parking system in height adjustable ratchets
- ☐ Pump and control unit on rear left post
- ☐ Pushbutton control unit with alarm signal
- ☐ Hydraulic cylinder under left platform
- ☐ Lifting and lowering by means of cables
- ☐ Emergency lowering valve

Superstructure:
- ☐ One movable platform as standard
- ☐ Integrated Free-wheel device in platforms

Standard colours
- ☐ Platforms & posts: Grey RAL 7016
- ☐ Ramps: Red RAL 3020

Illustrations are not binding and optional. Under reserve of dimensional, constructional and technical modifications! Validity 07/2016

Technical data	
Lifting capacity	5,200 kg
Lifting height	1,670 mm
Working height	1,810 mm
Lifting / lowering time	Standard: 24 / 26 Sec. D: 16 / 26 Sec.
Pump unit	Standard: 3.0 kW D: 2 x 3.0 kW
Voltage	3x230/400V - 50 Hz - 25/16 A

Platforms	
Total length	5,560/5,980/6,780 mm
Usable length of platform	4,680/5,100/5,500 mm
Wheel base, min. - max.	variabel
Platform width	550 mm
Distance between platforms	805 - 1,285 mm
Min. height	140/170/160/190 mm
Width between posts	3,000 mm
Total width - outer edges posts	3,422 mm
Total height	2,233 mm

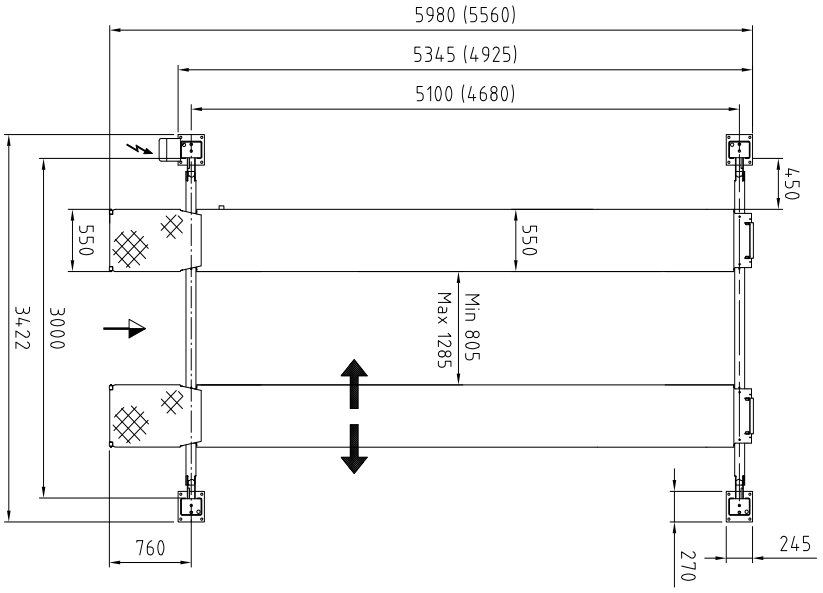

Scan the QR-Code for detailed product information.

Further Information on www.autopstenhoj.com

Versions:

- Available with different Voltage
- Drive-on ramps and stops for surface-mounting, alternatively drive-over ramps for recessed installation

Installation:

- S = flush platforms
- WL = with front recesses for turn tables and rear side slip plates, center cover plate between recesses and side slip plates
- G = galvanized platforms
- 42 = 4,200 mm platforms
- 47 = 4,700 mm platforms
- 51 = 5,100 mm platforms
- 55 = 5,500 mm platforms

Inspection lifts:
As standard equipped with re-inforced posts and larger cable diameter for intensive usage in inspection centres. As standard delivered with:
P = play detector (pneumatically operated for both lateral and rotational movement, for axle load up to 3 t), operation with wireless hand lamp
Option:
D = double pump unit for quicker lifting time. Control unit on front left post

MOT / ATL Inspection lifts:
Worldwide accepted inspection lifts which have been specified and constructed according to UK MOT and ATL (automated test lanes VOSA) requirements. Both MOT / ATL lifts are as standard delivered with front recesses with turntables and extra control unit for operation from front right post; ATL lifts furthermore equipped with re-inforced posts and larger cable diameter and:
P = play detector (pneumatically operated for both lateral and rotational movement, for axle load up to 3 t), operation with wireless hand lamp

Application

- ☐ Check-in
- ☐ Repair and maintenance
- ☐ Wheel alignment
- ☐ Testing equipment

Approvals

- ☐ Renault



Major 5230

Electro-hydraulic 4-post lift, 5.2 t capacity

Description:

Posts:
- ☐ Integrated eccentric brake system
- ☐ Emergency stop valve
- ☐ Obstruction system
- ☐ Pneumatic parking system in height adjustable ratchets
- ☐ Pump and control unit on rear left post
- ☐ Pushbutton control unit with alarm signal
- ☐ Hydraulic cylinder under left platform
- ☐ Lifting and lowering by means of cables
- ☐ Emergency lowering valve

Superstructure:
- ☐ One movable platform as standard
- ☐ Platforms prepared for AUTOPSTENHOJ Scissor jack Micro

Standard colours
- ☐ Platforms & posts: Grey RAL 7016
- ☐ Ramps: Red RAL 3020

Optional extras:

- ☐ Set of expansion bolts
- ☐ Extra control unit
- ☐ LED-Lighting set
- ☐ Set of two cover plates for recesses
- ☐ Set of two 385 mm ramp extensions
- ☐ Set of two platform extensions (0.5 m)

Special colours available on request!

Illustrations are not binding and optional. Under reserve of dimensional, constructional and technical modifications! Validity 07/2016

Technical data	
Lifting capacity	6,200 kg
Lifting height	1,670 mm
Working height	1,840 mm
Lifting / lowering time	app. 48/58 Sec.
Pump unit	3.0 kW
Voltage	3x230/400V - 50 Hz - 25/16 A

Platforms	
Total length	6,780/7,280 mm
Usable length of platform	5,500/6,000 mm
Wheel base, min. - max.	variabel
Platform width	630 mm
Distance between platforms	725 - 1,210 mm
Min. height	170 mm
Width between posts	3,000 mm
Total width - outer edges posts	3,432 mm
Total height	2,235 mm

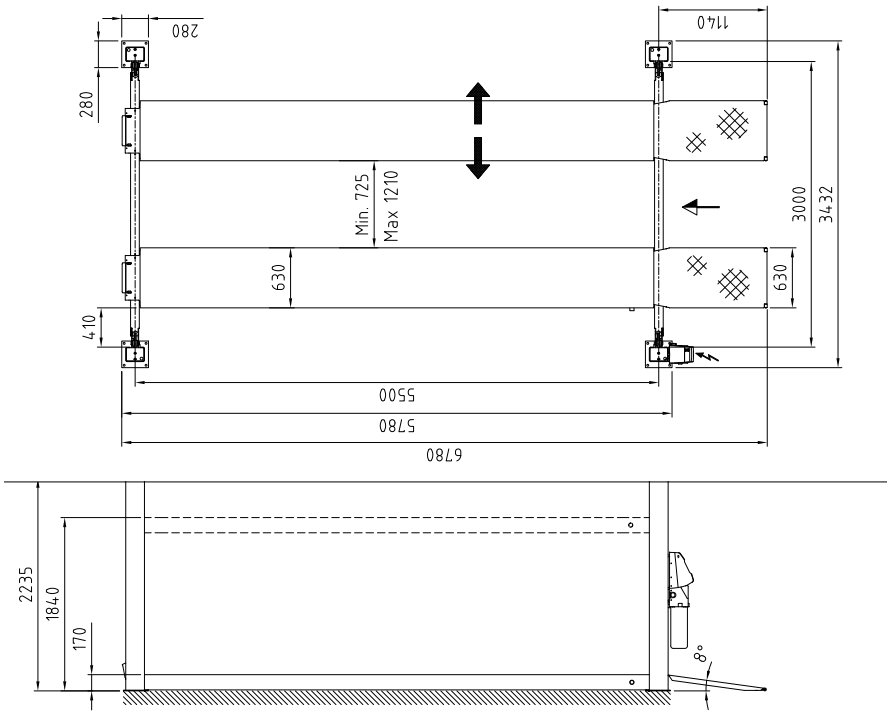

Scan the QR-Code for detailed product information.

Further Information on www.autopstenhoj.com

Versions:

- ☐ Available with different Voltage
- ☐ Drive-on ramps and stops for surface-mounting, alternatively drive-over ramps for recessed installation

Installation:
- ☐ S = flush platforms
- ☐ G = galvanized platforms
- ☐ 55 = 5,500 mm Platforms
- ☐ 60 = 6,000 mm Platforms

Optional extras:

- ☐ Set of expansion bolts
- ☐ Extra control unit
- ☐ LED-Lighting set
- ☐ Set of two 385 mm ramp extensions
- ☐ Set of two platform extensions (0.5 m)

Special colours available on request!

Application

- ☐ Check-in
- ☐ Repair and maintenance

Approvals

- ☐ Renault



Major 6230

Electro-hydraulic 4-post lift, 6.2 t capacity

Description:

Posts:
- ☐ Integrated eccentric brake system
- ☐ Emergency stop valve
- ☐ Obstruction system
- ☐ Pneumatic parking system in height adjustable ratchets
- ☐ Pump and control unit on rear left post
- ☐ Pushbutton control unit with alarm signal
- ☐ Hydraulic cylinder under left platform
- ☐ Lifting and lowering by means of cables
- ☐ Emergency lowering valve

Superstructure:
- ☐ One movable platform as standard
- ☐ Platforms prepared for AUTOPSTENHOJ Scissor jack Micro

Standard colours
- ☐ Platforms & posts: Grey RAL 7016
- ☐ Ramps: Red RAL 3020

Illustrations are not binding and optional. Under reserve of dimensional, constructional and technical modifications! Validity 07/2016

Technical data	
Lifting capacity	7,200 kg
Lifting height	1,670 mm
Working height	1,840 mm
Lifting / lowering time	app. 40/58 Sec.
Pump unit	3.0 kW
Voltage	3x230/400V - 50 Hz - 25/16 A

Platforms	
Total length	7,280 mm
Usable length of platform	6,000 mm
Wheel base, min. - max.	variabel
Platform width	630 mm
Distance between platforms	725 - 1,210 mm
Min. height	170 mm
Width between posts	3,000 mm
Total width - outer edges posts	3,432 mm
Total height	2,235 mm

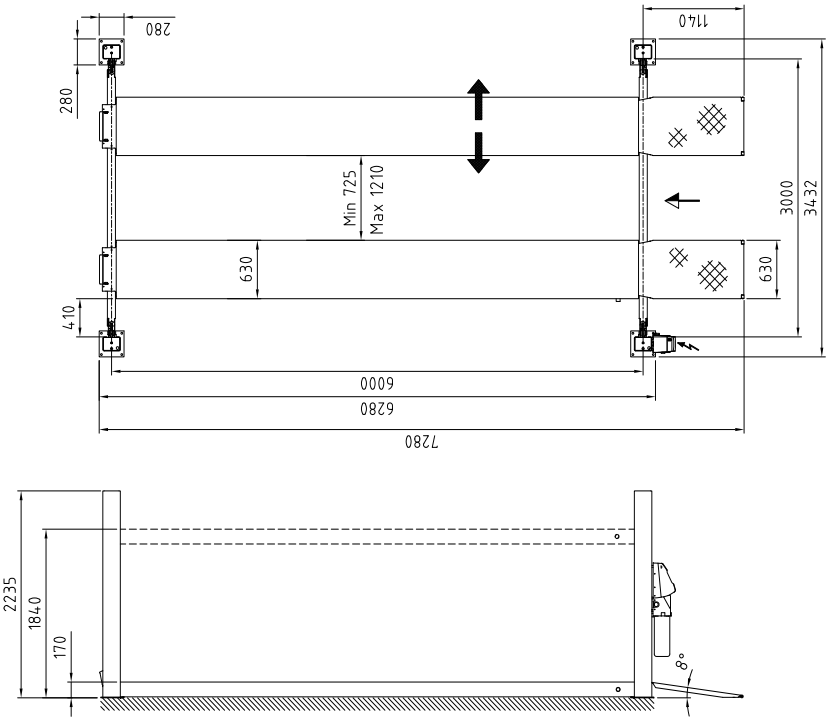

Scan the QR-Code for detailed product information.

Further Information on www.autopstenhoj.com

Versions:

- ☐ Available with different Voltage
- ☐ Drive-on ramps and stops for surface-mounting, alternatively drive-over ramps for recessed installation

Installation:
- ☐ S = flush platforms
- ☐ G = galvanized platforms
- ☐ 55 = 5,500 mm platforms
- ☐ 60 = 6,000 mm platforms

Optional extras:

- ☐ Set of expansion bolts
- ☐ Extra control unit
- ☐ LED-Lighting set
- ☐ Set of two 385 mm ramp extensions
- ☐ Set of two platform extensions (0.5 m)

Special colours available on request!



Application

- ☐ Check-in
- ☐ Repair and maintenance

Approvals

- ☐ Renault

Major 7230

Electro-hydraulic 4-post lift, 7.2 t capacity

Description:

Post:
- ☐ Integrated eccentric brake system
- ☐ Emergency stop valve
- ☐ Obstruction system
- ☐ Pneumatic parking system in height adjustable ratchets
- ☐ Pump and control unit on rear left post
- ☐ Pushbutton control unit with alarm signal
- ☐ Hydraulic cylinder under left platform
- ☐ Lifting and lowering by means of cables
- ☐ Emergency lowering valve

Superstructure:
- ☐ One movable platform as standard
- ☐ Platforms prepared for AUTOPSTENHOJ Scissor jack Micro

Standard colours
- ☐ Platforms & posts: Grey RAL 7016
- ☐ Ramps: Red RAL 3020

Illustrations are not binding and optional. Under reserve of dimensional, constructional and technical modifications! Validity 07/2016

Technical data	
Lifting capacity	2,000 / 2,600 kg
Lifting height	300 / 250 mm
Drive-over height	75 mm
Lifting / lowering time	27/5 / 23/5 Sec.
Operation	Air-hydraulic
Pressure min. - max.	5,5/8 bar
Lift positions:	792 - 1,600 mm

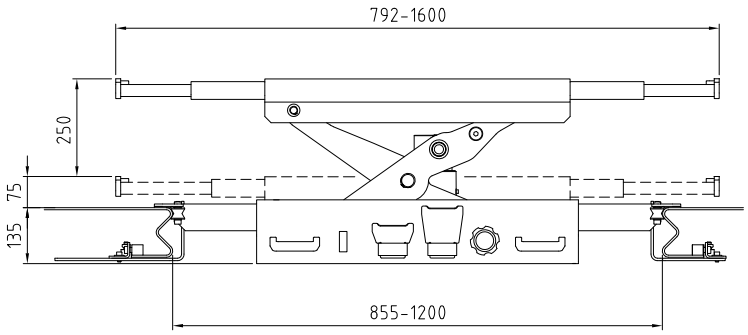

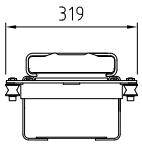

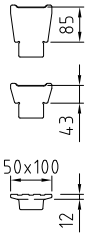

Scan the QR-Code for detailed product information.

Further Information on www.autopstenhoj.com

Versions:

- Micro 20 = 2,000 kg & 1,600 mm extension
  Micro 26 = 2,600 kg & 1,460 mm extension
- Special version Micro 26 = 2,600 kg & 1,600 mm extension
- Delivery includes a variety of pads

Optional extras:

- Hydraulic connection kits
- A large program of extra pads

Special colours available on request!

Application

- For use on Major platform lifts



Micro 20 & 26
Full hydraulic

Full hydraulic scissor jacks with 2 & 2.6 capacity

Description:

- Operates on the Major lift pump
- 2-hand operation
- Mechanical parking system
- Non-return valve
- Double arm extension
- Galvanized arms

Standard colours

- Red RAL 3020
- Grey RAL 7016

Illustrations are not binding and optional. Under reserve of dimensional, constructional and technical modifications! Validity 07/2016

Technical data	
Lifting capacity	2,000 / 2,600 / 4,000 kg
Lifting height	300 / 250 mm
Drive-over height	75 mm
Lifting / lowering time	27/5 / 23/5 Sec.
Operation	Air-hydraulic
Pressure min. - max.	5,5/8 bar
Lift positions:	792 - 1,600 mm

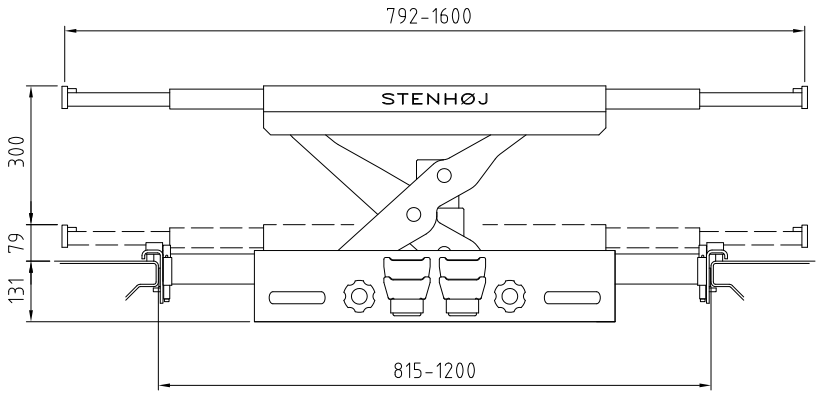

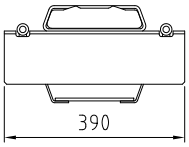

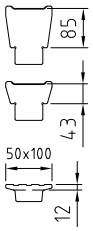

Scan the QR-Code for detailed product information.

Further Information on www.autopstenhoj.com

Versions:

- ☐ Micro 20 = 2,000 kg & 1,600 mm extension
  Micro 26 = 2,600 kg & 1,460 mm extension
- ☐ Micro 40 = 4,000 kg & 1,500 mm extension
- ☐ Special version Micro 26 = 2,600 kg & 1,600 mm extension
- ☐ Delivery includes a variety of pads

Optional extras:

- ☐ Air connection kits
- ☐ A large program of extra pads

Special colours available on request!



Application

- ☐ For use on Major platform lifts

Approvals

- ☐ Micro 20 & 26:
  BMW / Mini

Micro 20 & 26 & 40
Air-hydraulic

Air-hydraulic scissor jacks with 2 & 2.6 & 4.0 capacity

Description:

Micro 20 & 26:
- ☐ Double-acting cylinder
- ☐ 2-hand operation
- ☐ Mechanical parking system
- ☐ Non-return valve
- ☐ Retaining device
- ☐ Double arm extension
- ☐ Galvanized arms

Micro 40
- ☐ 2-hand operation
- ☐ Deadman control
- ☐ Pressure relief valve
- ☐ Retaining device
- ☐ Double arm extension

Standard colours
- ☐ Red RAL 3020
- ☐ Grey RAL 7016

Illustrations are not binding and optional. Under reserve of dimensional, constructional and technical modifications! Validity 07/2016

Technical data	
Lifting capacity	2,000 kg
Lifting height	250 mm
Drive-over height	75 mm
Lifting / lowering time	37/3 Sec.
Operation	Air-hydraulic
Pressure min. - max.	8,5/12 Bar
Lift positions:	780 - 1,500 mm

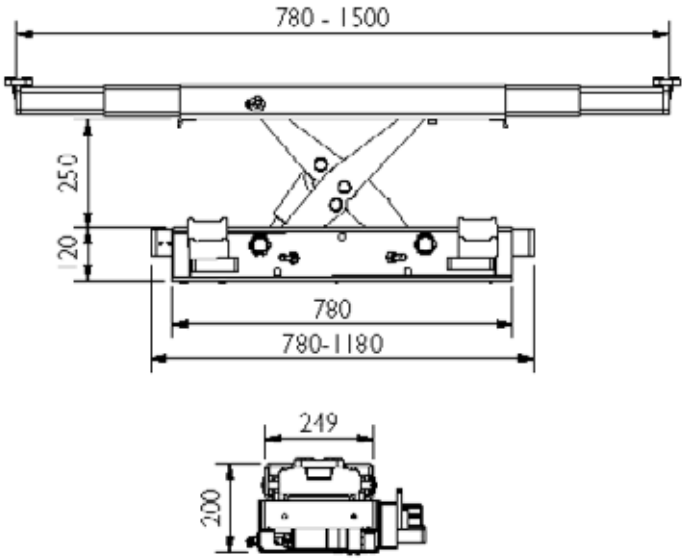

Scan the QR-Code for detailed product information.

Further Information on www.autopstenhoj.com

Versions:

- Micro 20 = 2,000 kg & 1,500 mm extension
- Micro 26 = 2,600 kg & 1,500 mm extension
- 3 Shot sets (10/40/85 mm) and rubber pads included

Optional extras:

- Air connection kits
- A large program of extra pads

Special colours available on request!

Application

- For use on Major platform lifts



Micro 20 & 26
Fully automatic / air-hydraulic

Fully automatic air-hydraulic scissor jacks with 2 & 2.6 capacity

Description:

- Joystick control
- Remote control
- Mechanical parking system
- Retaining device
- Double arm extension

Standard colours
- Red RAL 3020
- Grey RAL 7016

Illustrations are not binding and optional. Under reserve of dimensional, constructional and technical modifications! Validity 07/2016

Technical data	
Lifting capacity	3,000 kg
Lifting height	855 mm
Working height	960 mm + Rubber pads
Lifting / lowering time	50 Sec.
Pump unit	2.2 kW
Voltage	3x230/400V - 50 Hz

Scissor platforms	
Platform length	1,450 -2,030 mm
Platform width	600 mm
Distance between platforms	660 mm
Drive-on height	105 mm
Depth of recess	0 mm

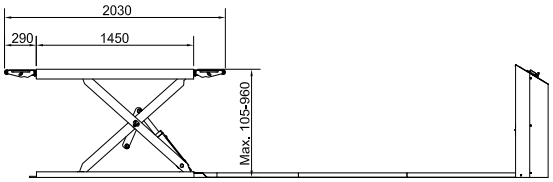

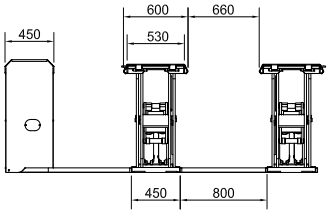

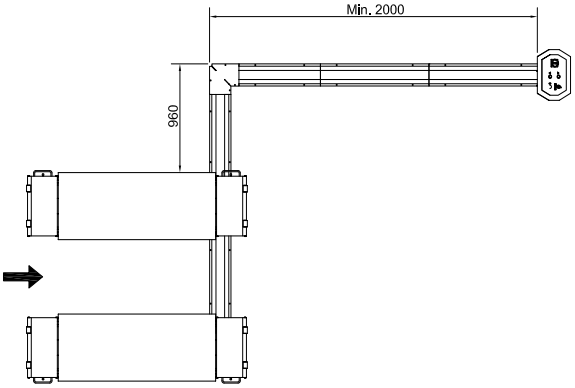



Scan the QR-Code for detailed product information.

Further Information on www.autopstenhoj.com

Versions:

- ☐ Available with different Voltage
- ☐ For surface-mounting or recession

Installation:

- ☐ L = low
- ☐ S = Superstructure on floor
- ☐ I = Superstructure in floor
- ☐ G = galvanized upper plates and base frame

Optional extras:

- ☐ LED lighting set for surface-mounted versions
- ☐ Set of expansion bolts
- ☐ Set rubber blocks, 40, 60, 70, 80 and 100 mm

Special colours available on request!

Application

- ☐ Repair and maintenance

Approvals

- ☐ Renault



MagiX 30 LS

Electro-hydraulic tyre lift, 3 t capacity

Description:

Upper plates:
- ☐ Double master / slave system
- ☐ Control stand with integrated pump unit and alarm signal
- ☐ Electronic synchronization
- ☐ Emergency lowering valve

Scissors:
- ☐ Sturdy scissor construction
- ☐ No mechanical connection between scissor sections
- ☐ Optimum access to vehicle
- ☐ Low minimum height

Standard colours
- ☐ Upper plates & scissor: Grey RAL 7016
- ☐ Ramps: Red RAL 3020

Illustrations are not binding and optional. Under reserve of dimensional, constructional and technical modifications! Validity 07/2016

Technical data	
Lifting capacity	3,000 kg
Lifting height	1,855 mm
Working height	S: 1,950 mm I: 1,845 mm + Rubber pads
Lifting / lowering time	45 (40) Sec.
Pump unit	2.2 kW
Voltage	3x230/400V - 50 Hz

Scissor platforms	
Platform length	1,490 - 2,040 mm
Platform width	670 mm
Distance between platforms	720 mm
Drive-on height	105 mm
Depth of recess	S: 0 mm I: 105 mm

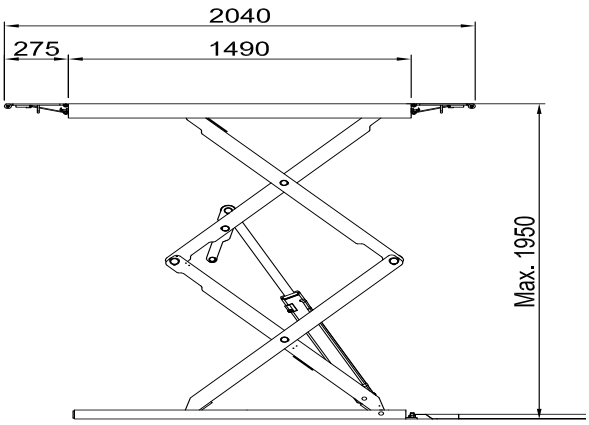

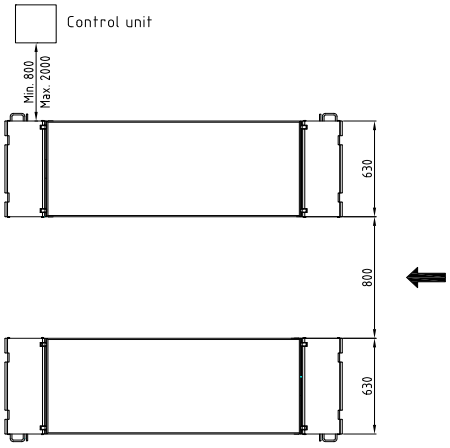

Scan the QR-Code for detailed product information.

Further Information on www.autopstenhoj.com

Versions:

- ☐ Available with different Voltage
- ☐ For surface-mounting or recession

Installation:

- ☐ S = Superstructure on floor
- ☐ I = Superstructure in floor
- ☐ G = galvanized upper plates and base frame

Optional extras:

- ☐ LED lighting set for surface-mounted versions
- ☐ Set of expansion bolts
- ☐ Set rubber blocks, 40, 60, 70, 80 and 100 mm

Special colours available on request!



Application

- ☐ Check-in
- ☐ Repair and maintenance

Approvals

- ☐ Volkswagen Group
- ☐ Volvo

MagiX 30

Electro-hydraulic scissor lift, 3 t capacity

Description:

Upper plates:
- ☐ Double master / slave system
- ☐ Control stand with integrated pump unit and alarm signal
- ☐ Electronic synchronization
- ☐ Emergency lowering valve

Scissors:
- ☐ Sturdy scissor construction
- ☐ No mechanical connection between scissor sections
- ☐ Optimum access to vehicle
- ☐ Low minimum height

Standard colours
- ☐ Upper plates & scissor: Grey RAL 7016
- ☐ Ramps: Red RAL 3020

Illustrations are not binding and optional. Under reserve of dimensional, constructional and technical modifications! Validity 07/2016

Technical data	
Lifting capacity	3,500 kg
Lifting height	1,795 mm
Working height	HS: 1,900 mm HI: 1,780 mm + Rubber pads
Lifting / lowering time	44/44 Sec.
Pump unit	3.0 kW
Voltage	3x230/400V-50 Hz

Scissor platforms	
Platform length	HS: 1,560 - 2,100 mm HI: 1.526 - 2,001 mm
Platform width	630 mm
Distance between platforms	800 mm
Drive-on height	HS: 105 mm HI: 0 mm
Depth of recess	HS. 0 mm HI: 110 mm

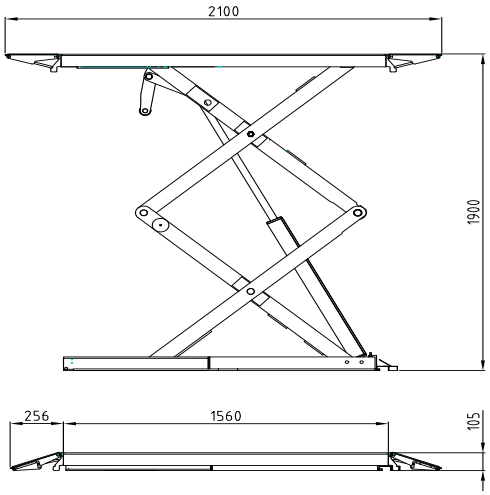

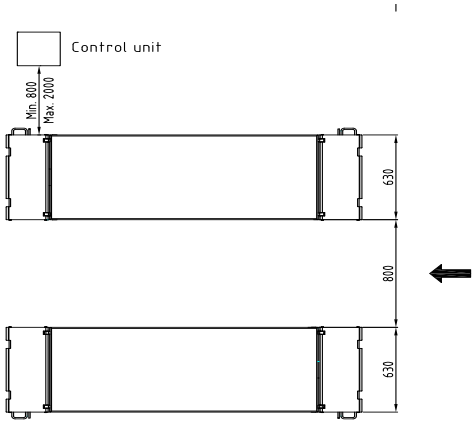

Scan the QR-Code for detailed product information.

Further Information on www.autopstenhoj.com

Versions:

- ☐ Available with different Voltage
- ☐ For surface-mounting or recession

Installation:

- ☐ S = Superstructure on floor
- ☐ I = Superstructure in floor
- ☐ G = galvanized upper plates and base frame

Optional extras:

- ☐ LED lighting set for surface-mounted versions
- ☐ Set of expansion bolts
- ☐ Set rubber blocks, 40, 60, 70, 80 and 100 mm

Special colours available on request!

Application

- ☐ Check-in
- ☐ Repair and maintenance

Approvals

- ☐ Volkswagen Group



MagiX 35

Electro-hydraulic scissor lift, 3.5 t capacity

Description:

Upper plates:
- ☐ Double master / slave system
- ☐ Control stand with integrated pump unit and alarm signal
- ☐ Electronic synchronization

Scissors:
- ☐ Emergency lowering valve
- ☐ Sturdy scissor construction
- ☐ No mechanical connection between scissor sections
- ☐ Optimum access to vehicle
- ☐ Low minimum height

Standard colours
- ☐ Upper plates & scissor: Grey RAL 7016
- ☐ Ramps: Red RAL 3020

Illustrations are not binding and optional. Under reserve of dimensional, constructional and technical modifications! Validity 07/2016

Technical data	
Lifting capacity	4,500 kg
Lifting height	1,680 mm
Working height	1,900 mm
Lifting / lowering time	55 Sec.
Pump unit	4.0 kW
Voltage	3x230/400V - 50 Hz

Scissor platforms	
Platform length	4,500/4,800/5,200 mm
Platform width	660 mm
Distance between platforms	800 - 1,000 mm
Drive-on height	220 mm
Depth of recess	0 mm

Free-wheel device	
Lifting capacity	4,000 kg
Lifting height	400 mm
Drive-on height	0 mm
Lifting / lowering time	7/15 Sec.
Operation	hydraulic
Necessary air pressure min. / max.	6 bar
Length	1,450 - 1.965 mm

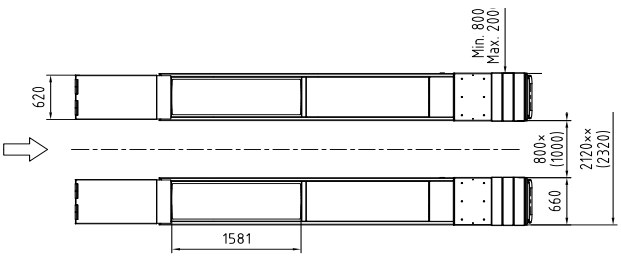

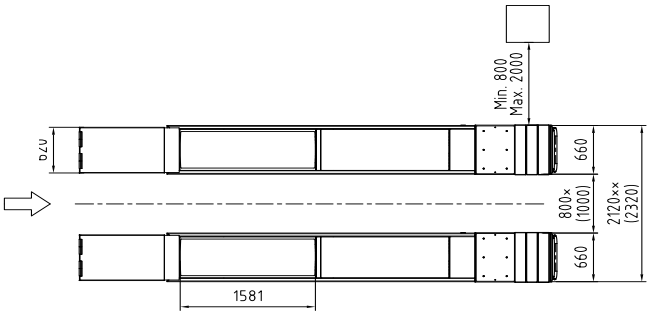

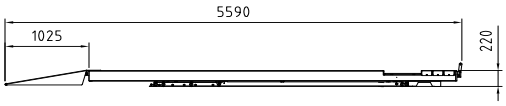

Scan the QR-Code for detailed product information.

Further Information on www.autopstenhoj.com

Versions:

- ☐ Available with different Voltage
- ☐ We recommend surface-mounting as the lifting height would otherwise be very low

Installation:

- ☐ S = flush platforms, incl. guiding edges for scissor jack
- ☐ WL = with front recesses for turn tables and rear side slip plates, incl. guiding edges for scissor jack
- ☐ Combi = platforms with integrated Free-wheel device
- ☐ Also available with galvanized base frame and platforms
- ☐ 45 = 4,500 mm platforms
- ☐ 48 = 4,800 mm platforms
- ☐ 52 = 5,200 mm platforms
- ☐ Incl. drive-on ramps, stops and LED lighting set

Optional extras:

- ☐ Set of expansion bolts
- ☐ Set rubber blocks, 40, 60, 70, 80 and 100 mm
- ☐ Guiding edges for scissor jack for Combi-versions
- ☐ Play detector

Special colours available on request!

Application

- ☐ Check-in
- ☐ Repair and maintenance
- ☐ Wheel alignment

Approvals

- ☐ Renault
- ☐ MS 45 S-45 & MS 45 WL-45: Volvo



MagiX 45

Electro-hydraulic scissor lift with platforms, 4.5 t capacity

Description:

Upper plates:
- ☐ Double master / slave system
- ☐ Control stand with integrated pump unit and alarm signal
- ☐ Electronic synchronization
- ☐ Emergency lowering valve

Scissors:
- ☐ Sturdy scissor construction
- ☐ No mechanical connection between scissor sections
- ☐ Optimum access to vehicle
- ☐ Low minimum height

Standard colours
- ☐ Upper plates & scissor: Grey RAL 7016
- ☐ Ramps: Red RAL 3020

Illustrations are not binding and optional. Under reserve of dimensional, constructional and technical modifications! Validity 07/2016

Technical data	
Lifting capacity	5,000 kg
Lifting height	1,810 mm
Working height	1,810 mm
Lifting / lowering time	55 Sec.
Pump unit	4.0 kW
Voltage	3x230/400V-50 Hz

Scissor platforms	
Platform length	4,500/4,800/5,200 mm
Platform width	660 mm
Distance between platforms	800 - 1,000 mm
Drive-on height	0 mm
Depth of recess	340 mm

Free-wheel device	
Lifting capacity	4,000 kg
Lifting height	400 mm
Drive-over height	0 mm
Lifting / lowering time	7/15 Sec.
Operation	hydraulic
Necessary air pressure min. / max.	6 bar
Length	1,450 - 1.965 mm

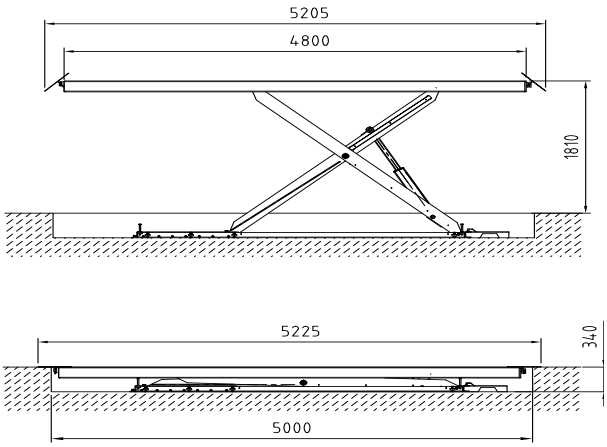

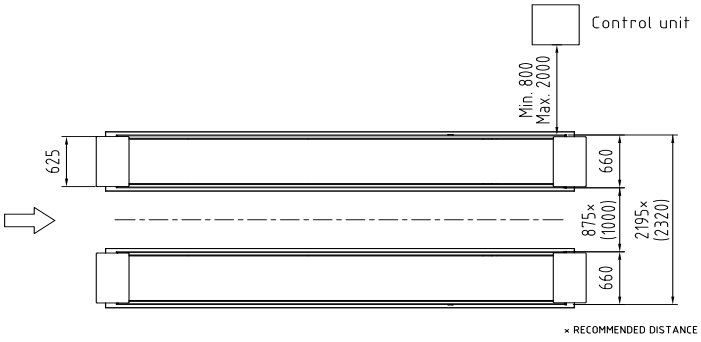

Scan the QR-Code for detailed product information.

Further Information on www.autopstenhoj.com

Versions:

- Available with different Voltage
- We recommend Superstructure in floor

Installation:

- I = Superstructure in floor
- S = flush platforms, incl. guiding edges for scissor jack
- W = with front recesses for turn tables and rear side slip plates, incl. guiding edges for scissor jack
- Combi = platforms with integrated free-wheel lift
- Also available with galvanized base frame and platforms

- 45 = 4,500 mm Platforms
- 48 = 4,800 mm Platforms
- 52 = 5,200 mm Platforms
- Incl. drive-on ramps, stops and LED lighting set

Optional extras:

- Set of expansion bolts
- Set rubber blocks, 40, 60, 70, 80 and 100 mm
- Guiding edges for scissor jack for Combi-versions
- Play detector

Special colours available on request!

Application

- ☐ Check-in
- ☐ Repair and maintenance
- ☐ Wheel alignment

Approvals

- ☐ Renault



MagiX 50

Electro-hydraulic scissor lift with platforms, 5 t capacity

Description:

Upper plates:
- ☐ Double master / slave system
- ☐ Control stand with integrated pump unit and alarm signal
- ☐ Electronic synchronization
- ☐ Emergency lowering valve

Scissors:
- ☐ Sturdy scissor construction
- ☐ No mechanical connection between scissor sections
- ☐ Optimum access to vehicle
- ☐ Low minimum height

Standard colours
- ☐ Upper plates & scissor: Grey RAL 7016
- ☐ Ramps: Red RAL 3020

Illustrations are not binding and optional. Under reserve of dimensional, constructional and technical modifications! Validity 07/2016



Safe lifting at the highest level.

There is nothing that can separate lifts from AUTOPSTENHOJ and vehicles of all kinds. Professional accessories make it even easier and more comfortable. A wide range of cleverly designed lifting pads and rubber blocks complete the AUTOPSTENHOJ lift making it the perfect tool for lifting up all kind of vehicles in a professional way.



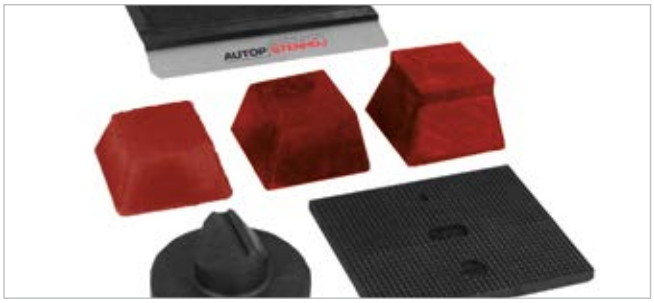

Lifting pads: Compatibility in a nutshell!

- Compatible with diverse and difficult body shapes or lifting points
- Suitable for inground and surface-mounted lifts
- Various heights and diameters are available to suit your needs

Rubber pads for any vehicle.

- Reliable protection of the underside of the vehicle when using the manufacturer's recommended lifting points
- Various designs and sizes available

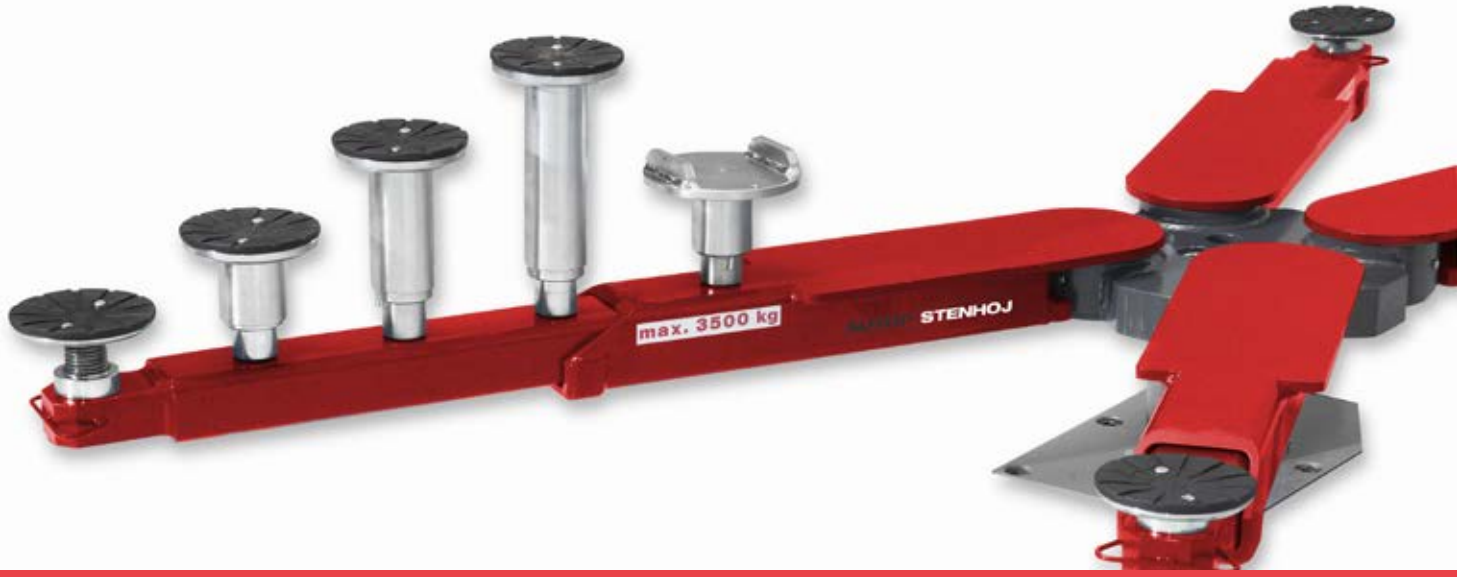



Wheel support devices - what a benefit!

- Full access to the underside of the vehicle
- Wheels don't get out of suspension springs
- Ideal to avoid changes of the workstation
- Arm distance „Standard": 400 mm
- Arm distance „Offroad": 500 mm
- Lifting capacity: 875 kg (per Wheel forks) or. 3,500 kg (per set)

Exclusive accessories for exclusive lifts.

The wheel support devices are only for use on inground and surface-mounted AUTOPSTENHOJ lifts.

Technical data		
	RC 82	RC 122
Usable basket diametre	790 mm	1,190 mm
Usable height	500 mm	500 mm
Loading heigh	930 mm	830 mm
Max. basket load	300 kg	500 kg
Liquid volume	150 l	370 l
Pump ratio	200 l / min	280 l / min
Pump pressure	3 bar	5 bar
Nessesary constant air pressure	230 / 400 V - 50 Hz - 14 A	230 / 400 V - 50 Hz - 24 A
Pump motor rating	1.5 kW	4 kW
Heating	6 kW	9 + 6 kW
Basket drive	Jet of water	E-Motor 0.09 kW
Total height	app. 1,200 mm	app. 1,300 mm
Total width	app. 1,300 mm	app. 1,650 mm
Total depth	app. 1,300 mm	app. 1,500 mm
Total weight	app. 220 kg	app. 350 kg

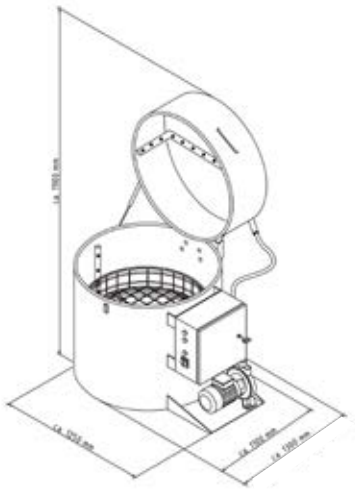

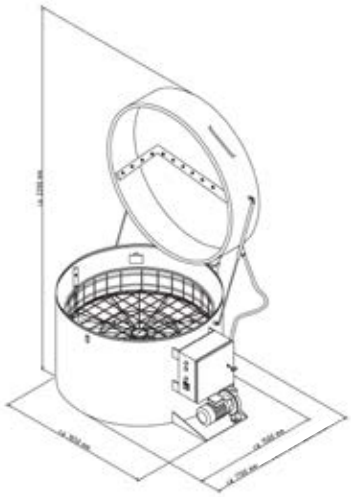

Scan the QR-Code for detailed product information.

Further Information on www.autopstenhoj.com

Versions:

- ☐ RC 82 with 790 mm usable basket diameter
- ☐ RC 122 with 1190 mm usable basket diameter

Optional extras:

- ☐ Heating guage
- ☐ Oil skimmer
- ☐ Economy insulation
- ☐ Detergents & small parts baskets
- ☐ Service counter

Special colours available on request!

Approvals

- ☐ Opel









Jet Cleaner RC 82/122

Parts cleaning machine

Description:

Parts cleaning machine made of stainless steel for economical and ecological parts cleaning, degreasing on water basis using spray nozzels

- ☐ Compact and sturdy design
- ☐ Made of stainless steel
- ☐ Simple handling
- ☐ Space saving
- ☐ 3D-blast pipe system incl. flat fan nozzles
- ☐ Low-water level alarm
- ☐ Safety limit switch on cover

Tub cover

- ☐ Track rollers + fixed rollers

Illustrations are not binding and optional. Under reserve of dimensional, constructional and technical modifications! Validity 07/2016



TO MAKE HARD WORK EASY.

Did you know ...

... that an African bull elephant in average has a shoulder height of 3.20 m and weights approximately five tons? In theory, the heavy duty lift Multiflex 450 from AUTOPSTENHOJ could therefore lift up eight of these impressive animals simultaneously. But practically, we leave the beautiful elephants in the African bush - there they are at home.



The safe lifting of a commercial vehicle up to 45 tons is not only a question of the capacity of a lift, but also of the right overall technology. Whether electro-mechanical, electro-hydraulic or air-hydraulic, each of our lifts follows a sophisticated concept that takes account not only of load but also of other essential issues, most important of which is safety.

For AUTOPSTENHOJ safety and quality are our primary focuses. This is also an important point for heavy vehicles to make it as easy as possible, for example the control panel is placed in an ergonomic working height.

Technical data	
Lifting capacity	10,000 kg
Lifting height	1,700 mm
Stroke length	1,435 mm
Lifting / lowering time	45 sec.
Motor	3.0 kW
Operation	hydraulic
Necessary air pressure min. / max.	7/10 bar
Voltage	3x230/400V-50 Hz - 25/16 A

Technical data	
Min. height	210 mm
Drive-through width	2,054/2,364/2,773 mm
Width between posts	2,800/3,120/3,520 mm
Total width	3,490/3,810/4,210 mm
Total height	2,354 mm
Total length	5,900/6,400/8,300/8,800 mm
Platform length	4,600 / 7,000 mm
Utilization area of platform	variable
Platform width	650/750 mm
Distance between platforms	525/775-720/1,060-1,000/1,240 mm
Wheel base	variable

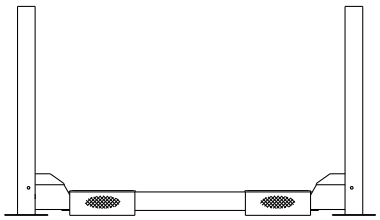

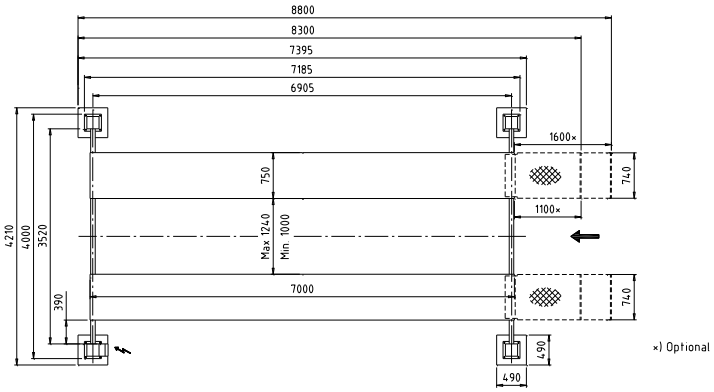

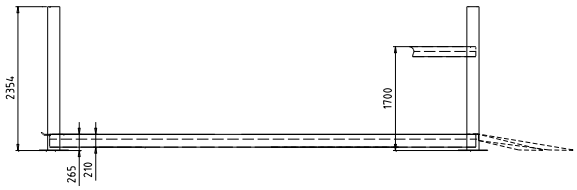

Scan the QR-Code for detailed product information.

Further Information on www.autopstenhoj.com

Versions:

- Available with different Voltage
- 4,600 mm flush platforms
  7,000 mm flush platforms
- 1,100 mm or 1,600 mm drive-on ramps
- Drive-on ramps and stops for surface-mounting; alternatively drive-over ramps for recessed installation

Optional extras:

- Set of expansion bolts
- Lighting set
- Scissor jack
- 3rd platform

Special colours available on request!

Application

- ☐ Repair and maintenance



Maxi 100

Electro-hydraulic 4-post lifts, 10 t capacity

Description:

- ☐ Friction brake system in the event of cable failure
- ☐ Pneumatic parking system in height adjustable ratchets
- ☐ Pump unit with immersed motor
- ☐ Pump and control unit on front left post
- ☐ Pushbutton control unit with alarm signal
- ☐ One movable platform as standard
- ☐ Lifting and lowering by means of cables

Standard colours

- ☐ Platforms & posts: Grey RAL 7016
- ☐ Ramps: Red RAL 3020

Illustrations are not binding and optional. Under reserve of dimensional, constructional and technical modifications! Validity 07/2016

Technical data	
Lifting capacity	16,000 / 20,000 / 24,000 kg
Lifting height	1,850 mm
Stroke length	1,545 /1,555 mm
Lifting / lowering time	120 Sek.
Motor	4 x 2.2 / 6 x 2.2 kW
Operation	mechanical
Voltage	3x230/400V-50 Hz - 35/45 A / 3x230/400V-50 Hz - 25/16 A 3x230/400V-50 Hz - 45/60 A

Technical data	
Min. height	176 mm
Drive-through width	3,200 / 3,470 mm
Width between posts	3,200 / 3,470 mm
Total width	3,920 / 4,190
Total height	2,550 mm
Total length	9,005 /9,745 /11,505 /12,395 mm
Platform length	5,000/7,500/8,000/8,500/9,000 mm
Utilization area of platform	variabel
Platform width	700 mm
Distance between platforms	950 / 1,180 mm
Wheel base	variabel

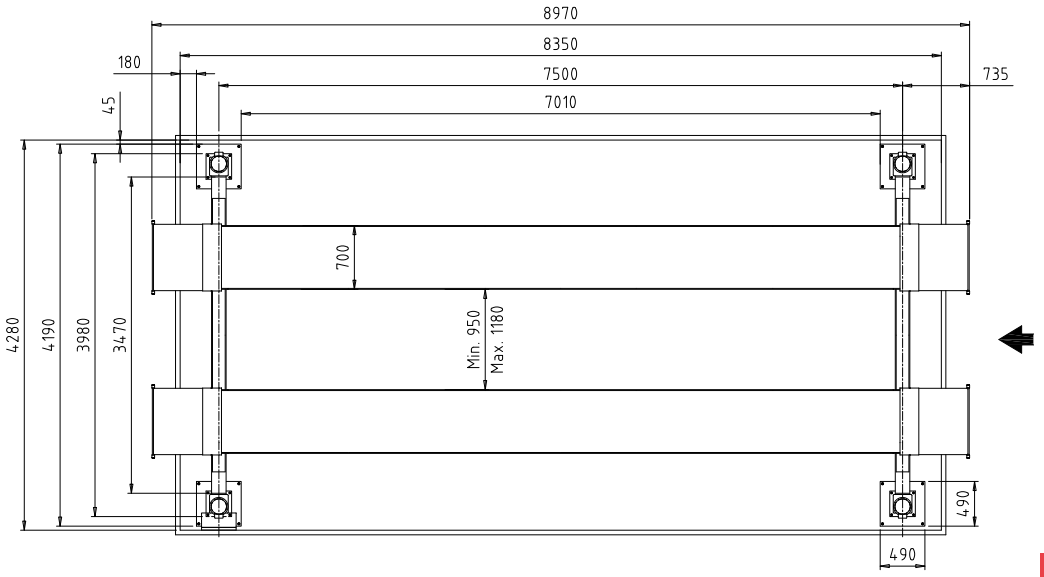

Scan the QR-Code for detailed product information.

Further Information on www.autopstenhoj.com

Versions:

- ☐ Maxi 160 & 200:
  3,950 mm flush platforms
  7,500 mm flush platforms
  8,000 mm flush platforms
  8,500 mm flush platforms
  9,000 mm flush platforms
- ☐ Maxi 240:
  2 x 5,000 mm flush platforms
- ☐ 1,260, 2,000 or 2,800 mm Drive-on ramps
- ☐ Drive-on ramps and stops for surface-mounting; alternatively drive-over ramps for recessed installation

Optional extras:

- ☐ Set of expansion bolts
- ☐ Lighting set
- ☐ Scissor jack
- ☐ 3rd platform

Special colours available on request!

Application

- ☐ Repair and maintenance



Maxi 160, 200 & 240

Electro-mechanical 4-post lifts,16, 20 & 24 t capacity

Description:

- ☐ Obstruction system
- ☐ Each post equipped with a motor and elastic coupling
- ☐ Self-carrying spindles with carrying and safety nuts
- ☐ Pushbutton control unit with alarm signal
- ☐ One movable platform as standard

Standard colours

- ☐ Platforms & posts: Grey RAL 7016
- ☐ Ramps: Red RAL 3020

Illustrations are not binding and optional. Under reserve of dimensional, constructional and technical modifications! Validity 07/2016

Technical data	
Lifting capacity	7,500 kg
Lifting height	1,700 mm
Working height	1,800/1,850 mm
Lifting / lowering time	90/135 Sec.
Pump unit	1.1/2.2 kW
Operation	hydraulic
Voltage	3 x 230/400V - 50 Hz - 25/16 A
Min. height	140/155 mm
Total height	3,700/3,770 mm

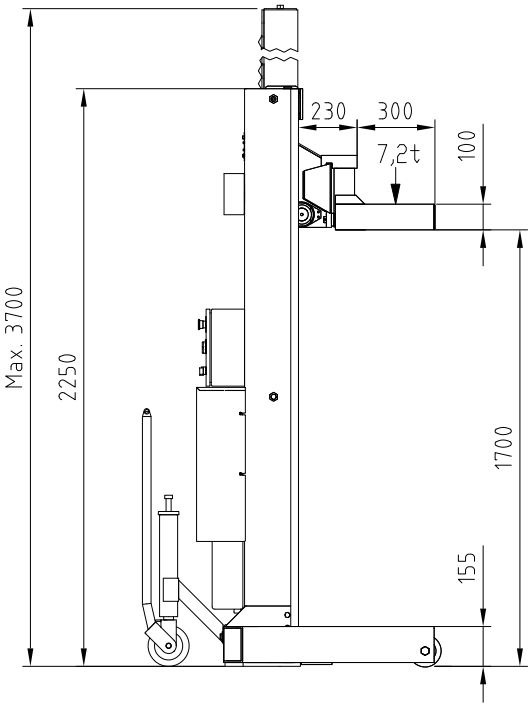

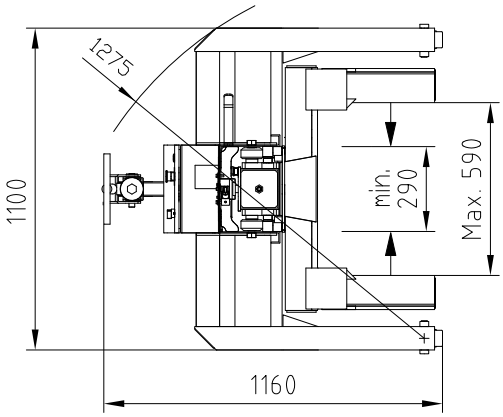

Scan the QR-Code for detailed product information.

Further Information on www.autopstenhoj.com

Versions:

- ☐ Available with different Voltage
- ☐ Cable version: with 4 or 6 columns
- ☐ Wireless version: up to 10 columns

Optional extras:

- ☐ Traverse, 15 t
- ☐ Support for traverse
- ☐ Support stand, 880-1,410 mm, 8.2 t
- ☐ Support stand, 1,350-2,130 mm, 8.2 t
- ☐ Remote control for cable version

Special colours available on request!



Application

- ☐ Repair and maintenance
- ☐ Car wash
  (Version with cablel)



Not for all markets!

Mobile 75 + WB

Electro-hydraulic mobile lifts with 7.5 t capacity per column

Description:

- ☐ Self-carrying hydraulic cylinders
- ☐ Encased cylinders
- ☐ Spring-loaded wheel with locking device on column back
- ☐ All wheel sizes, 155R13-13R22.50, ø550-1140 mm
- ☐ Fork length 300 mm

Standard colours

- ☐ Wheel forks : Red RAL 3020
  Grey RAL 7016

Illustrations are not binding and optional. Under reserve of dimensional, constructional and technical modifications! Validity 07/2016

Technical data	
Lifting capacity	6,000/10,000/12,000/14,000 kg
Stroke length	200 mm
Lifting height	800 mm
Operation	Air-hydraulic
Necessary air pressure min. / max.	8 - 12 bar

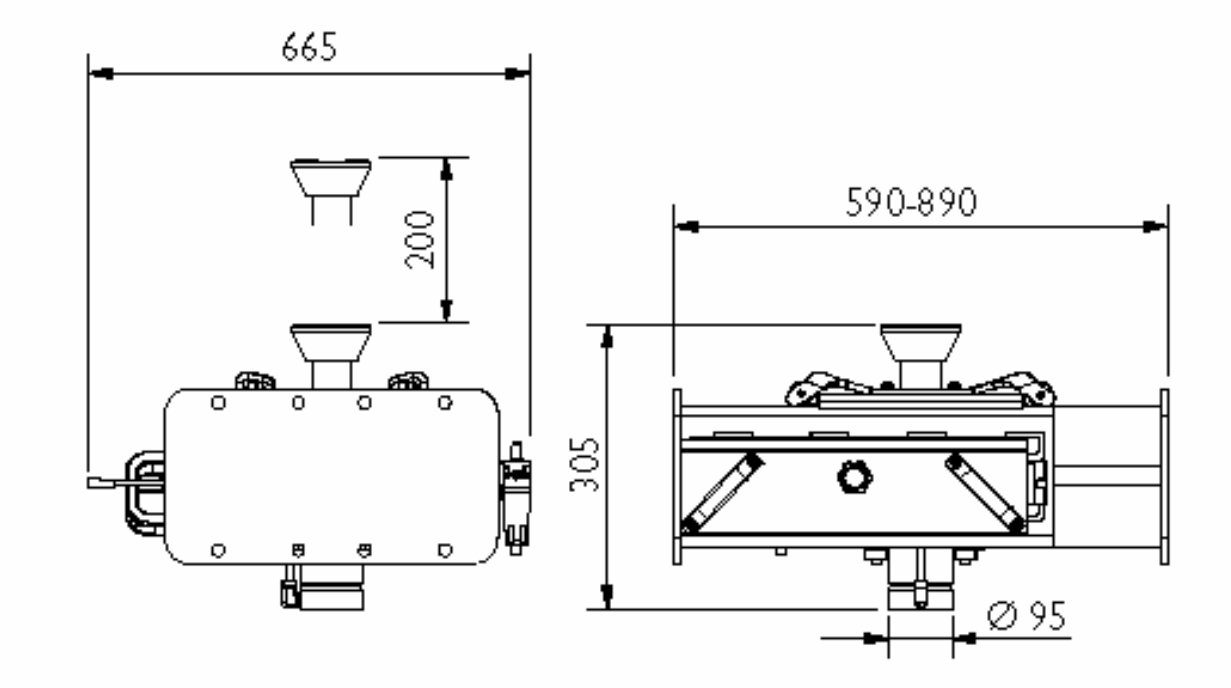

Scan the QR-Code for detailed product information.

Further Information on www.autopstenhoj.com

Versions:

- 1 or 2 cylinders with adjustable bridge: 590-890 mm or 850-1,150 mm
- 1-cylinders with 1 x 100 mm extension
- 2-cylinders with 2 x 100 mm extensions

Optional extras:

- Air connection kits
- Traversen
- Auxiliary bridge

Special colours available on request!

Application

- For use on Maxi platform lifts



Micro 60, 100, 120 & 140

Air-hydraulic auxialiary jacks with 1 or 2 cylinders, 6, 10, 12 & 14 t capacity

Description:

- Transversely sliding cylinders
- Rapid and precie air-hydraulic unit with highspeed approach control
- Control panel at ergonomical working height
- Deadman control
- Pressure relief valve

Standard colours

- Red RAL 3020
- Grey RAL 7016

Illustrations are not binding and optional. Under reserve of dimensional, constructional and technical modifications! Validity 07/2016

Technical data	
Lifting capacity	23,000/30,000/34,500/45,000 kg
Stroke length	variabel
Lifting height	1,750 mm
Lifting / lowering time	80/100 Sec.
Operation	hydraulic
Voltage (depending on the model)	3 x 230/400V - 50 Hz - 35/25 A 3 x 230/400V - 50 Hz - 25/16 A 3 x 230/400V - 50 Hz - 45/35 A
Motor	2 x 3.0 kW / 3 x 3.0 kW

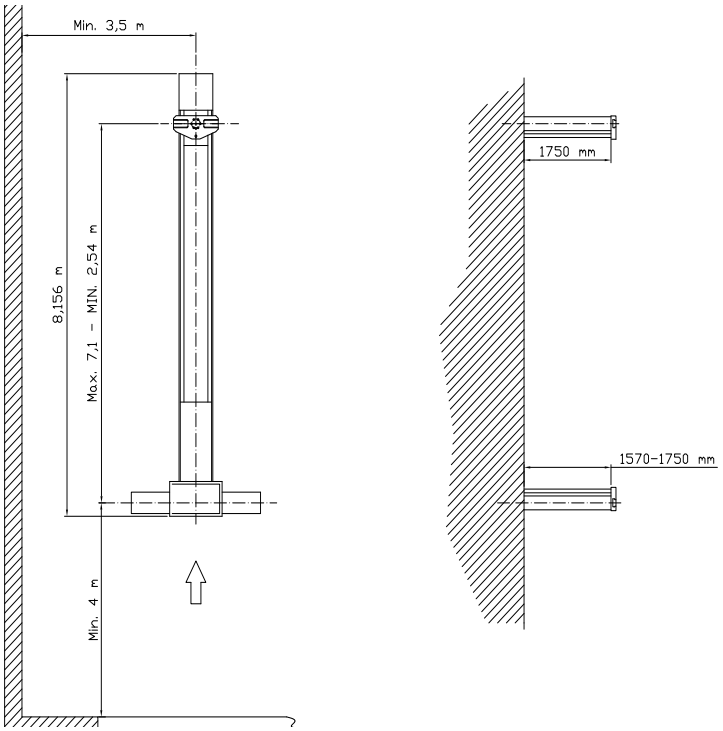

Scan the QR-Code for detailed product information.

Further Information on www.autopstenhoj.com

Versions:

- Available with different Voltage
- 2 or 3 cylinders
- 1 or 2 movable cylinder
- Multiflex 230 & 300:
  with base plates and 4 pieces 100 mm
  and 2 pieces 285 mm adjustable adaptors
- Multiflex 345 & 450:
  with base plates and 6 pieces 100 mm
  and 2 pieces 285 mm adjustable adaptors

Optional extras:

- A large program of adjustable adaptors
  for different kinds of vehicles

Special colours available on request!



Application

- ☐ Repair and maintenance

Multiflex 230, 300, 345 & 450

Electro-hydraulic 2- or 3-cylinder lifts, 23, 30, 34.5 & 45 t capacity

Description:

- ☐ Hard-chrome plated cylinders integrated in outer casing, which functions as a lubricating oil reservoir
- ☐ 25 t pump unit per cylinder
- ☐ External hard-chrome plated safety leg
- ☐ Remote control with emergency stop
- ☐ Sturdy lubricated stuffing box with double teflon band
- ☐ Galvanized steel roller shutters with a surface spot load of 1.5 t

Standard colours

- ☐ Base plate: Grey RAL 7016
- ☐ Arms: Red RAL 3020

Illustrations are not binding and optional. Under reserve of dimensional, constructional and technical modifications! Validity 07/2016

Technical data	
Lifting capacity	10,000/15,000/20,000 kg
Working height	800/420 mm
Operation	Air-hydraulic
Necessary air pressure min. / max.	8 - 12 bar
Min. height	1,020/525 mm

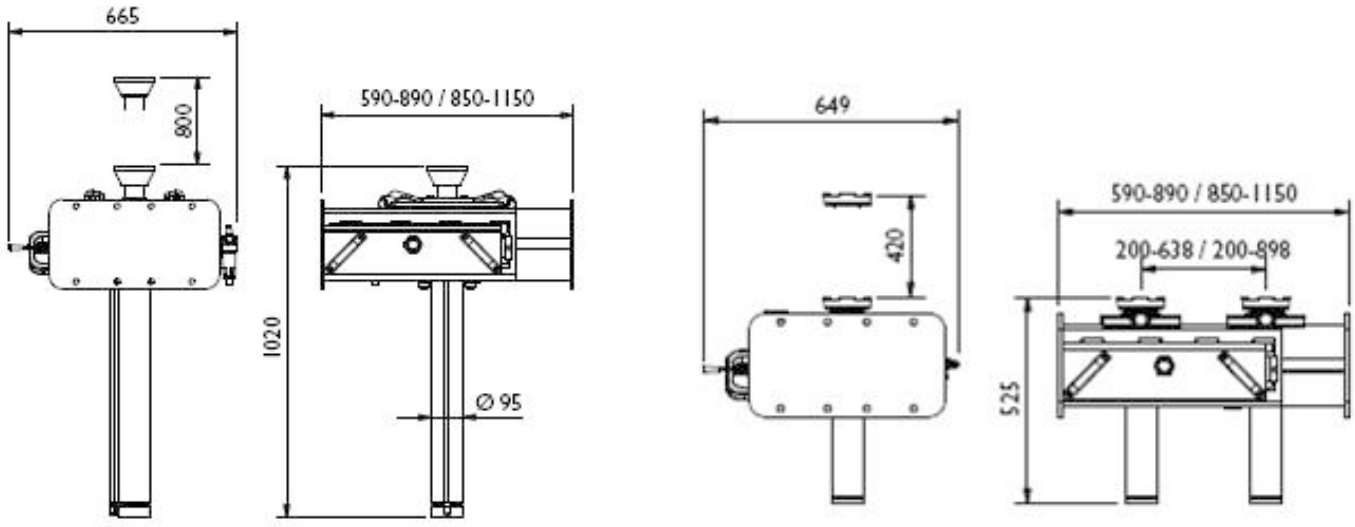

Scan the QR-Code for detailed product information.

Further Information on www.autopstenhoj.com

Versions:

- 1 or 2 cylinders with adjustable bridge: 590-890 mm or 850-1,150 mm
- 1-cylinders with 1 x 100 mm extension
- 2-cylinders with 2 x 100 mm extensions

Optional extras:

- Auxiliary bridge
- 13, 15 & 20 t traverses
- 100 & 200 mm extensions

Special colours available on request!



Application

- ☐ Repair and maintenance

Macro 100, 150 & 200

Air-hydraulic pit jacks with 1 or 2 cylinders, 10, 15 & 20 t capacity

Description:

- ☐ Transversely sliding cylinders
- ☐ Rapid and precie air-hydraulic unit with highspeed approach control
- ☐ Control panel at ergonomical working height
- ☐ Deadman control
- ☐ Pressure relief valve

Standard colours

- ☐ Red RAL 3020
- ☐ Grey RAL 7016

Illustrations are not binding and optional. Under reserve of dimensional, constructional and technical modifications! Validity 07/2016

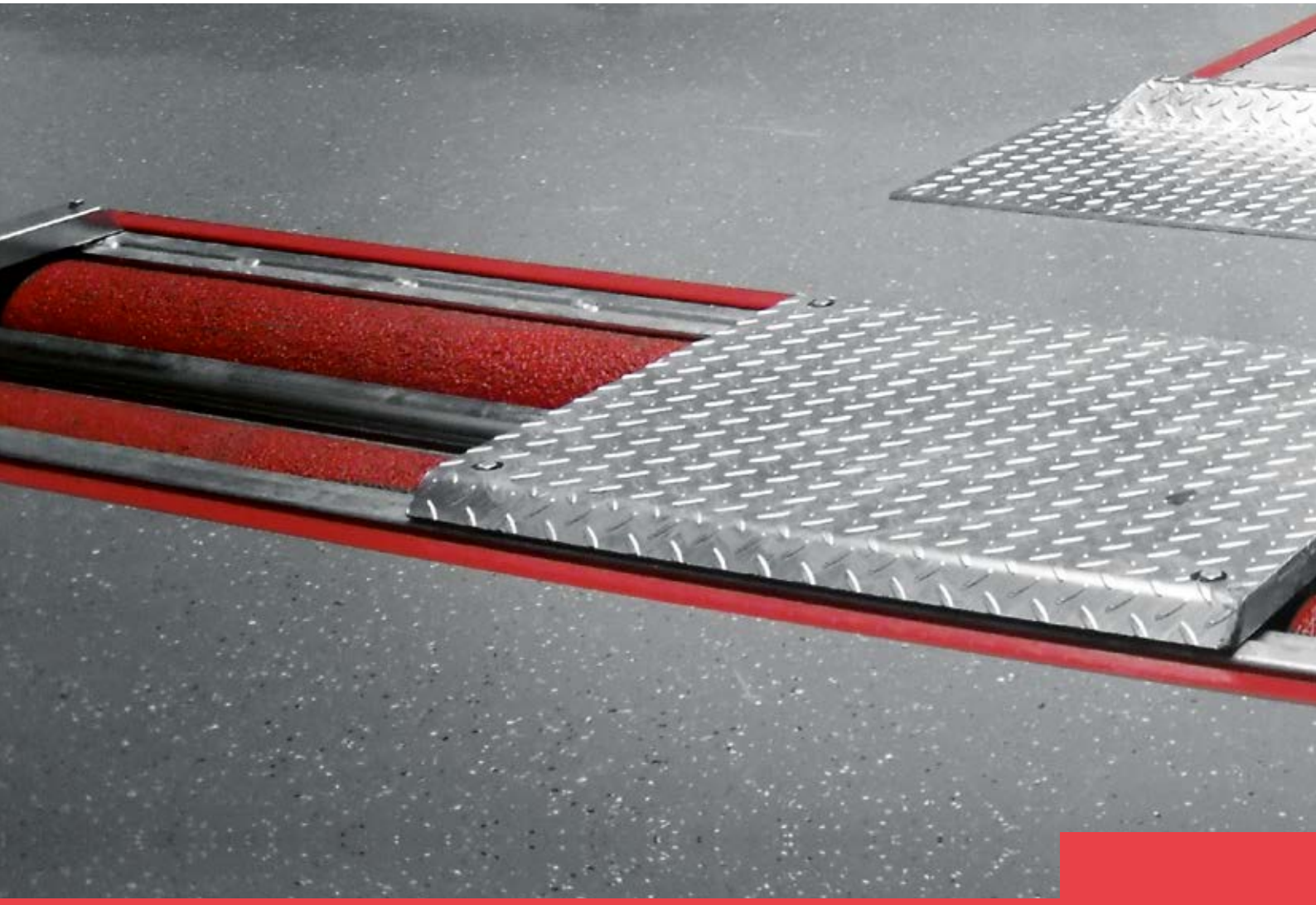

Progress even at a standstill ...

Progress can not slow down, driving cars can. Thanks to every new development around brakes and electronic assistance systems, cars get more and more reliable. Whoever wants to keep up with these development must also progress continuously.

Therefore we are developing our brake tester product lines in all critical areas ourselves using our own dedicated people. This also applies to the complex electronics necessary for controlling and measuring. We integrate our experience and have an inhouse software department.



Your advantage: The requests for brake testing equipment are continuously changing. For example, new national/legislative requirements or new electronic components inside of the cars – your AUTOPSTENHOJ testing equipment can be updated constantly.

- Own developments in the fields of mechanics, electronics (measure and control), as well as software ensure high quality
- Iso Certification
- Modern BUS system in the E-Box
- Modular construction for long-term investment security:
  from simple roller brake tester to ultra-modern test lanes with suspension tester, side-slip plate and the latest data software
- Maximum flexibility and adaptability, e.g. for new countries, new regulations or technical modifications from the car manufacturers

Technical data	
Drive over load	4.000 kg
Track width	variabel (advise 800 - 2,020 mm)
Test load	4 t
Fuse protection	10 A träge
Electrical connection	230 V, 50 / 60 Hz
Brake force	max. 9,99 kN
Dimension display (L x W x H))	550 x 180 x 55 mm
Dimensions brake plate (L x W x H)	1.760 x 610 x 50 mm

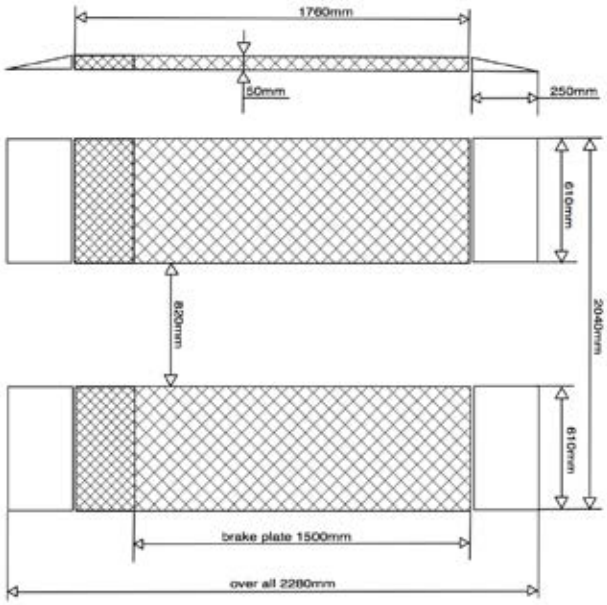

Scan the QR-Code for detailed product information.

Further Information on www.autopstenhoj.com

Optional extras:

- ☐ Mounting set above floor
- ☐ Mounting set floor level
- ☐ Galvanized base plates
- ☐ Wall mount
- ☐ Pedestal
- ☐ Metal cable cover
- ☐ PC-connection kit & asa live stream
- ☐ Minicomputer asa live stream
- ☐ Radar sensor externally

Other special equipment possible!



Application

- ☐ Check-in
- ☐ Repair and maintenance
- ☐ Testing equipment
- ☐ General inspection



Testmaster PT 40

Plate brake tester

Description:

- ☐ Digital display cabinet for brake values
- ☐ Integrated radar sensor
- ☐ 2 galvanized brake plates with expanded metall
- ☐ Delivered with 15 m cable
- ☐ No special foundation requirements, simple floor-mounted assembly with low construction height of 50 mm (Also available as a comfortable floor-level version)
- ☐ Easy installation, 240 V power connection
- ☐ Wear-free electronic DMS measuring system

Installation:

- ☐ Above floor
- ☐ Floor level

Illustrations are not binding and optional. Under reserve of dimensional, constructional and technical modifications! Validity 07/2016

Technical data	
Drive over load	3,000 kg
Test speed	2.6 km/h
Drive power of motors	2 x 2.4 kW
Roller diameter	167 mm
Track width	820 - 2,160 mm
Test load	at 50 % braking 2 t
Fuse protection	3 x 16 A träge
Electrical connection	3 x 400 V, N, PE 50 Hz
Brake force	5 kN
Dimsions analog display box (W x H x D)	810 x 610 x 70 mm
Dimensions brake plate (L x W x H)	2,260 x 580 x 208 mm (820 - 2,160 mmm)

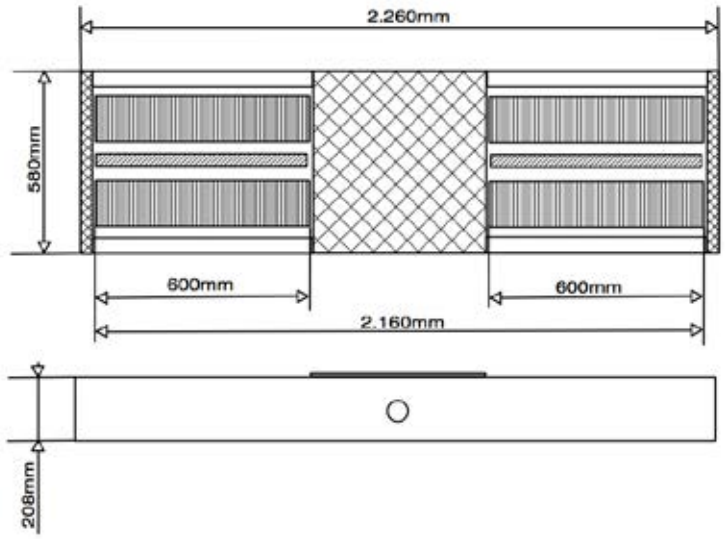

Scan the QR-Code for detailed product information.

Further Information on www.autopstenhoj.com

Optional extras:

- ☐ Installation frame
- ☐ Permanent formwork
- ☐ Plastic-coated rollers
- ☐ Pneumatic lowering / lifting device
- ☐ Roller set raising
- ☐ Suspension tester
- ☐ Side slip tester
- ☐ Manually reversible rotation and measuring direction
- ☐ Automatically four wheel recognition (patented)
- ☐ EDOS (Easy drive out system - patented)
- ☐ Roller cover plate
- ☐ Remote control
- ☐ Digital display LED
- ☐ Pedal force meter
- ☐ Weighing device
- ☐ PC connection & ASA live stream
- ☐ Minicomputer for ASA live stream
- ☐ PC Software Display Basic, Display Test Lane & Display Office

Other special equipment possible!



Application

- ☐ Check-in
- ☐ Repair and maintenance
- ☐ Testing equipment
- ☐ General inspection



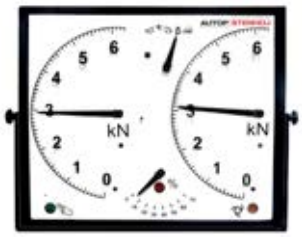

Only Export

Testmaster RT30

Roller brake tester

Description:

- ☐ Hot-dip galvanized, enclosed roller set
- ☐ Low wear rollers, 167 mm with welded profile surface
- ☐ Track width: 820 to 2,160 mm
- ☐ Adjusting screws for height adjustment
- ☐ Wear-free, electronic measuring system DMS
- ☐ Tracer rollers 50 mm, standard stainless steel
- ☐ Prepared for weighing device
- ☐ Modular system, all roller sets can be extended to test lane
- ☐ Compact electric / switchbox, prepared for upgrade
- ☐ Drive-over axle load 3 t
- ☐ Brake force 5 kN
- ☐ Already equipped with a drive-off assistance
- ☐ Manual / Automatic mode
- ☐ Delayed switch on, start-up monitoring, slip switch-off and switch-off after exiting the test bed
- ☐ Lockable main switch
- ☐ Large easy to read analog brake force display with two 400 mm watches

Illustrations are not binding and optional. Under reserve of dimensional, constructional and technical modifications! Validity 07/2016

Technical data		
Drive over load	RT40	4,000 kg
	RT60	6,000 kg
Test speed		700 mm 1,000 mm*
Drive power of motors	RT40	2 x 3 kW (optional 2 x 4 kW Motoren)
	RT60	2 x 4 kW (optional 2 x 5.5 kW Motoren)
Roller diameter		205 mm
Track width	RT40	800 - 2.,200 mm (optional 800 - 2,800mm)
	RT60	800 - 2,800 mm
Test load	RT40	at 50% braking 2,0 t (option 2.6 t)
	RT60	at 50% braking 2,6 t (option 4 t)
Fuse protection		3 x 20 A inert (3 - 4 kW Motoren) 3 x 25 A inert (5,5 kW Motoren)
Electrical connection		3 x 400 V, N, PE 50 Hz
Brake force	RT40	4.5 kN (option 6 kN)
	RT60	6 kN (option 10 kN)
Diemsions analog display box (W x H x D)		810 x 670 x 70 mm
Dimensions brake plate (L x W x H)	RT40	2,320 x 680 x 240 (800 - 2,200 mm)
	RT60	2,925 x 680 x 240 (800 - 2,800 mm)

RT 40

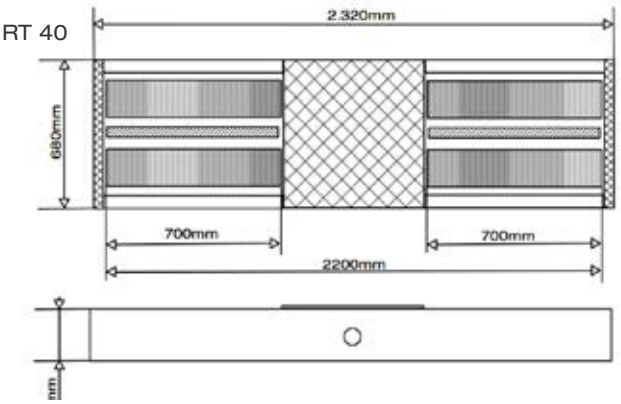

RT 60

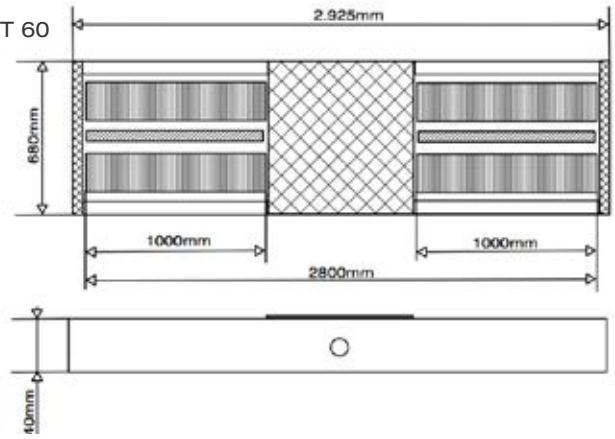

Scan the QR-Code for detailed product information.

Further Information on www.autopstenhoj.com

Optional extras:

- ☐ Roller set RT40 track width 800 - 2,800 mm
- ☐ Foundation frame
- ☐ Permanent formwork
- ☐ Plastic-coated rollers
- ☐ Pneumatic lowering / lifting device
- ☐ Roller set raising
- ☐ Suspension tester
- ☐ Side slip tester
- ☐ Manually reversible rotation and measuring direction
- ☐ Automatically four wheel recognition (patented)
- ☐ EDOS (Easy drive out system - patented)
- ☐ Roller cover plate
- ☐ Remote control
- ☐ Digital display LED
- ☐ Pedal force meter
- ☐ Weighing device
- ☐ PC connection & ASA live stream
- ☐ Minicomputer for ASA live stream
- ☐ PC Software Display Basic, Display Test Lane & Display Office

Other special equipment possible!

Application

- ☐ Check-in
- ☐ Repair and maintenance
- ☐ Testing equipment
- ☐ General inspection





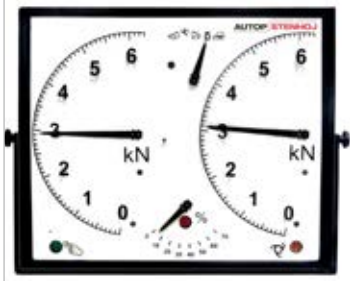

Testmaster RT40 / RT60

Roller brake tester

Description:

- ☐ Hot-dip galvanized, enclosed roller set
- ☐ Low wear rollers, 205 mm with welded profile surface
- ☐ Track width RT40: 800 to 2,200 mm (optional 800 up to 2,800 mm) / RT60: 800 to 2,800 mm
- ☐ Adjusting screws for height adjustment
- ☐ Wear-free, electronic measuring system DMS
- ☐ Tracer rollers 50 mm, standard stainless steel
- ☐ Prepared for weighing device
- ☐ Modular system, all roller sets can be extended to test lane
- ☐ Compact electric / switchbox, prepared for upgrade
- ☐ Drive-over axle load RT40 4 t (optional up 5 t) / Drive-over axle load RT60 6 t
- ☐ Brake force RT40 4,5 kN (optional 6 kN) / Brake force RT60 6 kN (optional 10 kN)
- ☐ Already equipped with a drive-off assistance
- ☐ Manual / Automatic mode
- ☐ Delayed switch on, start-up monitoring, slip switch-off and switch-off after exiting the test bed
- ☐ Testing program for electronic parking brakes
- ☐ Lockable main switch
- ☐ Large easy to read analog display with 2 x 400 mm Watches

Illustrations are not binding and optional. Under reserve of dimensional, constructional and technical modifications! Validity 07/2016

Technical data		
Drive over load	RT40	4,000 kg
	RT60	6,000 kg
Test speed		700 mm 1,000 mm*
Drive power of motors	RT40	2 x 3 kW (optional 2 x 4 kW Motoren)
	RT60	2 x 4 kW (optional 2 x 5.5 kW Motoren)
Roller diameter		205 mm
Track width	RT40	800 - 2.,200 mm (optional 800 - 2,800mm)
	RT60	800 - 2,800 mm
Test load	RT40	at 50% braking 2,0 t (option 2.6 t)
	RT60	at 50% braking 2,6 t (option 4 t)
Fuse protection		3 x 20 A inert (3 - 4 kW Motoren) 3 x 25 A inert (5,5 kW Motoren)
Electrical connection		3 x 400 V, N, PE 50 Hz
Brake force	RT40	4.5 kN (option 6 kN)
	RT60	6 kN (option 10 kN)
Diemsions analog display box (W x H x D)		810 x 670 x 70 mm
Dimensions brake plate (L x W x H)	RT40	2,320 x 680 x 240 (800 - 2,200 mm)
	RT60	2,925 x 680 x 240 (800 - 2,800 mm)

RT 40

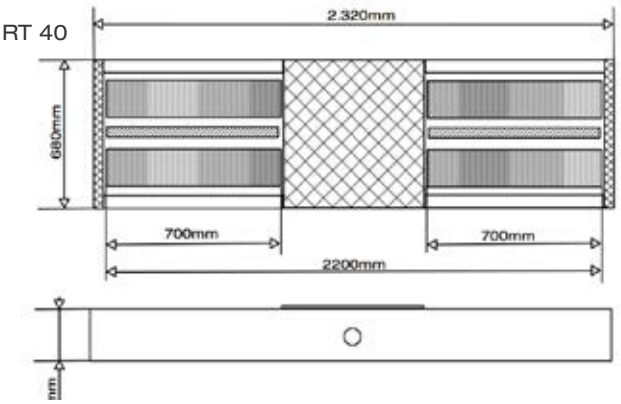

RT 60

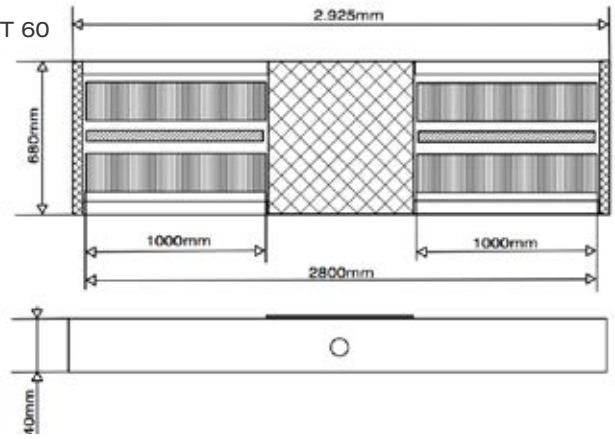

Scan the QR-Code for detailed product information.

Further Information on www.autopstenhoj.com

Optional extras:

- ☐ Roller set RT40 track width 800 - 2,800 mm
- ☐ Foundation frame
- ☐ Permanent formwork
- ☐ Plastic-coated rollers
- ☐ Pneumatic lowering / lifting device
- ☐ Roller set raising
- ☐ Suspension tester
- ☐ Side slip tester
- ☐ Manually reversible rotation and measuring direction
- ☐ Automatically four wheel recognition (patented)
- ☐ EDOS (Easy drive out system - patented)
- ☐ Roller cover plate
- ☐ Remote control
- ☐ Digital display LED
- ☐ Pedal force meter
- ☐ Weighing device
- ☐ PC connection & ASA live stream
- ☐ Minicomputer for ASA live stream
- ☐ PC Software Display Basic, Display Test Lane & Display Office

Other special equipment possible!

Application

- ☐ Check-in
- ☐ Repair and maintenance
- ☐ Testing equipment
- ☐ General inspection







Testmaster RT40 / RT60 PC

Roller brake tester

Description:

- ☐ Hot-dip galvanized, enclosed roller set
- ☐ Low wear rollers, 205 mm with welded profile surface
- ☐ Track width RT40: 800 to 2,200 mm (optional 800 up to 2,800 mm) / RT60: 800 to 2,800 mm
- ☐ Adjusting screws for height adjustment
- ☐ Wear-free, electronic measuring system DMS
- ☐ Tracer rollers 50 mm, standard stainless steel
- ☐ Prepared for weighing device
- ☐ Modular system, all roller sets can be extended to test lane
- ☐ Compact electric / switchbox, prepared for upgrade
- ☐ Drive-over axle load RT40 4 t (optional up 5 t) / Drive-over axle load RT60 6 t
- ☐ Brake force RT40 4,5 kN (optional 6 kN) / Brake force RT60 6 kN (optional 10 kN)
- ☐ Already equipped with a drive-off assistance
- ☐ Manual / Automatic mode
- ☐ Delayed switch on, start-up monitoring, slip switch-off and switch-off after exiting the test bed
- ☐ Testing program for electronic parking brakes
- ☐ Lockable main switch
- ☐ PC software dispaly basic and PC-connection kit

Illustrations are not binding and optional. Under reserve of dimensional, constructional and technical modifications! Validity 07/2016

Technical data - Roller set	
Drive over load	4,000 kg
Test speed	5 km/h
Drive power of motors	2 x 3,0 kW / 2 x 4,0 kW*
Roller diameter	205 mm
Track width	800 - 2,200 mm 800 - 2,800 mm*
Brake force per wheel	4,5 kN / 6 kN*
Test load	at 50% braking 2,0 t / 2,6 t*

Shokabsorber	
Drive over load	4,000 kg
Test load Suspension tester	2.6 t
Drive power of motors	2 x 1.2 kW
Fuse protection	3 x 20 A inert
Electrical connection	3 x 400 V, N, PE 50 Hz
Dimensions analog display box (W x H x D)	810 x 670 x 70 mm
Dimensions roller set (W x L x H)	2,320 x 680 x 240 (800 - 2,200 mm) Option 2,925 x 680 x 240 (800 - 2800 mm)
Dimensions suspension tester (W x L x H)	2.320 x 800 x 280 mm

* Option

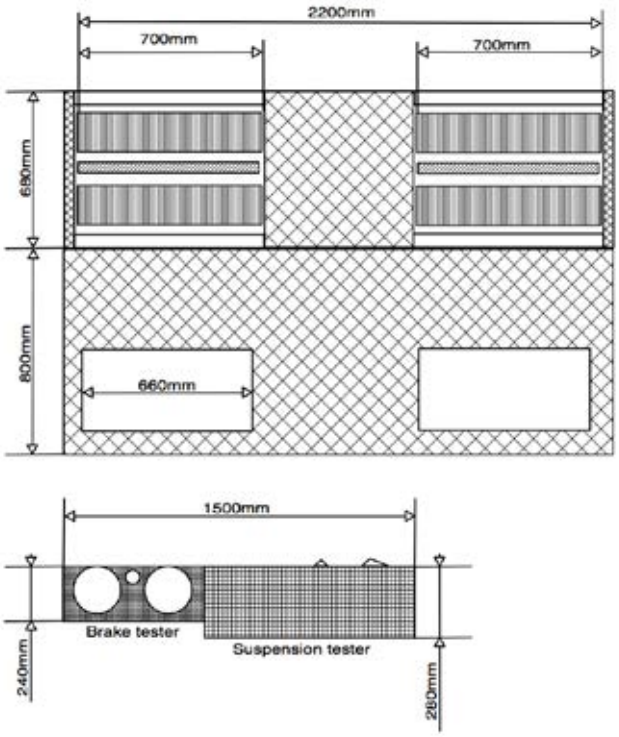

Scan the QR-Code for detailed product information.

Further Information on www.autopstenhoj.com

Optional extras:

- ☐ Roller set RT40 track width 800 - 2,800 mm
- ☐ Foundation frame
- ☐ Permanent formwork
- ☐ Plastic-coated rollers
- ☐ Pneumatic lowering / lifting device
- ☐ Roller set raising
- ☐ Suspension tester
- ☐ Side slip tester
- ☐ Manually reversible rotation and measuring direction
- ☐ Automatically four wheel recognition (patented)
- ☐ EDOS (Easy drive out system - patented)
- ☐ Roller cover plate
- ☐ Remote control
- ☐ Digital display LED
- ☐ Pedal force meter
- ☐ Weighing device
- ☐ PC-connection kit & ASA live stream
- ☐ Minicomputer ASA live stream
- ☐ PC Software Display Basic, Display Test Lane & Display Office

Other special equipment possible!

Application

- ☐ Check-in
- ☐ Repair and maintenance
- ☐ Testing equipment
- ☐ General inspection

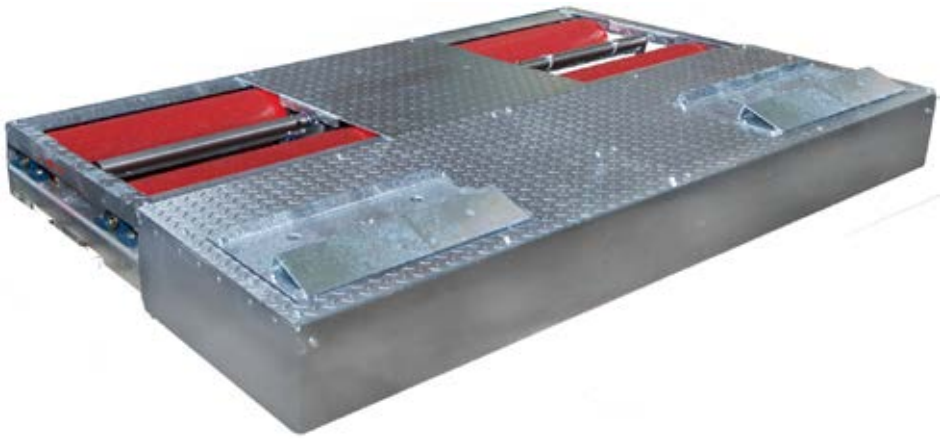



Testmaster TL40

Test lane

Description:

- ☐ Hot-dip galvanized, enclosed roller set
- ☐ Low wear rollers, 205 mm with welded surface
- ☐ Track width: 800 to 2,200 mm (optional 800 - 2,800 mm)
- ☐ Adjusting screws for height adjustment
- ☐ Wear-free, electronic measuring system DMS
- ☐ Tracer rollers 50 mm, standard stainless steel
- ☐ Prepared for weighing device
- ☐ Modular system, all roll sets can be extended to test lane
- ☐ Compact electric / switchbox, prepared for upgrade
- ☐ Drive-over axle load 4 t (optional up 5 t)
- ☐ Brake force 4,5 kN (optional 6 kN)
- ☐ Already equipped with a drive-off assistance
- ☐ Manual / Automatic mode
- ☐ Delayed switch on, start-up monitoring, slip switch-off and switch-off after exiting the test bed
- ☐ Testing program for electronic parking brakes
- ☐ Lockable main switch
- ☐ Suspension tester Boge system, hot-dip galvanized bottom group
- ☐ Testing panels hot dip galvanized
- ☐ Large easy to read analogue display

Illustrations are not binding and optional. Under reserve of dimensional, constructional and technical modifications! Validity 07/2016

Technical data - Roller set	
Drive over load	4,000 kg
Test speed	5 km/h
Drive power of motors	2 x 3,0 kW / 2 x 4,0 kW*
Roller diameter	205 mm
Track width	800 - 2,200 mm 800 - 2,800 mm*
Brake force per wheel	4,5 kN / 6 kN*
Test load	at 50% braking 2,0 t / 2,6 t*

* Option

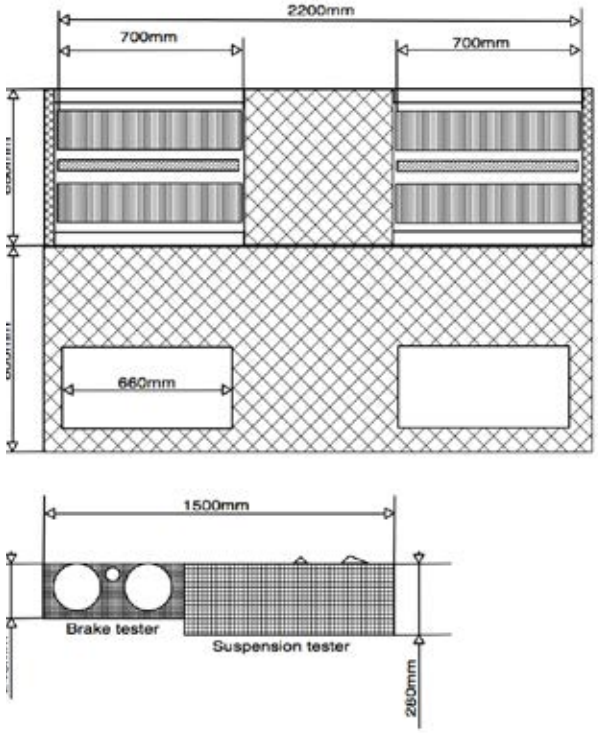

Shokabsorber	
Drive over load	4,000 kg
Test load Suspension tester	2.6 t
Drive power of motors	2 x 1.2 kW
Fuse protection	3 x 20 A inert
Electrical connection	3 x 400 V, N, PE 50 Hz
Dimensions analog display box (W x H x D)	810 x 670 x 70 mm
Dimensions roller set (W x L x H)	2,320 x 680 x 240 (800 - 2,200 mm) Option 2,925 x 680 x 240 (800 - 2800 mm)
Dimensions suspension tester (W x L x H)	2.320 x 800 x 280 mm

Scan the QR-Code for detailed product information.

Further Information on www.autopstenhoj.com

Optional extras:

- ☐ Roller set RT40 track width 800 - 2,800 mm
- ☐ Foundation frame
- ☐ Permanent formwork
- ☐ Plastic-coated rollers
- ☐ Pneumatic lowering / lifting device
- ☐ Roller set raising
- ☐ Suspension tester
- ☐ Side slip tester
- ☐ Manually reversible rotation and measuring direction
- ☐ Automatically four wheel recognition (patented)
- ☐ EDOS (Easy drive out system - patented)
- ☐ Roller cover plate
- ☐ Remote control
- ☐ Digital display LED
- ☐ Pedal force meter
- ☐ Weighing device
- ☐ PC-connection kit & ASA live stream
- ☐ Minicomputer ASA live stream
- ☐ PC Software Display Office

Other special equipment possible!

Application

- ☐ Check-in
- ☐ Repair and maintenance
- ☐ Testing equipment
- ☐ General inspection

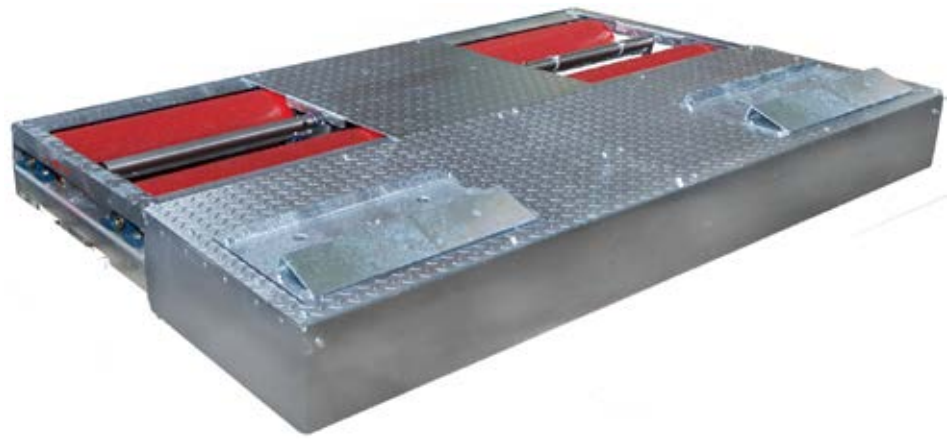





Testmaster TL40 PC

Test lane

Description:

- ☐ Hot-dip galvanized, enclosed roller set
- ☐ Low wear rollers, 205 mm with welded surface
- ☐ Track width: 800 to 2,200 mm (optional 800 - 2,800 mm)
- ☐ Adjusting screws for height adjustment
- ☐ Wear-free, electronic measuring system DMS
- ☐ Tracer rollers 50 mm, standard stainless steel
- ☐ Prepared for weighing device
- ☐ Modular system, all roller sets can be extended to test lane
- ☐ Compact electric / switchbox, prepared for upgrade
- ☐ Drive-over axle load 4 t (optional up 5 t)
- ☐ Brake force 4,5 kN (optional 6 kN)
- ☐ Already equipped with a drive-off assistance
- ☐ Manual / Automatic mode
- ☐ Delayed switch on, start-up monitoring, slip switch-off and switch-off after exiting the test bed
- ☐ Testing program for electronic parking brakes
- ☐ Lockable main switch
- ☐ Suspension tester Boge system, hot-dip galvanized bottom group
- ☐ Testing panels hot-dip galvanized
- ☐ PC-connection kit with software display test lane

Illustrations are not binding and optional. Under reserve of dimensional, constructional and technical modifications! Validity 07/2016



Take your brake test bench ...

... to the fast lane.

The possibilities of the AUTOPSTENHOJ brake testers grow according to the market's requirements. In order to come up to these requirements we developed a wide range of accessories which can be used to build up your individual brake tester or test lane.



Software-display:
- ☐ Available in different versions

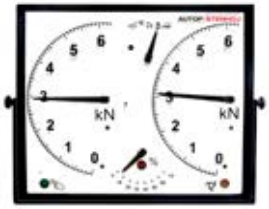

Analogue-display:
- ☐ Available for roller sets and test lanes



Display LED:
- ☐ As single or as combination with analogue display



Remote control:
- ☐ Optional infrared or radio

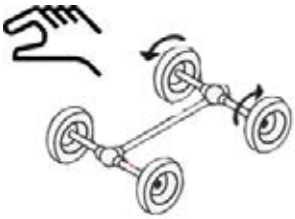

Yoke with long plug-in sleeves:
- ☐ To combine analogue display with digital display LED on the top

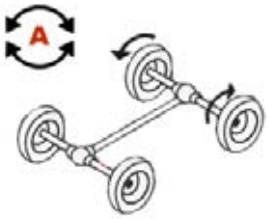

4 wheel drive recognition:
- ☐ Patented



Easy-drive-out-system:
- ☐ To leave the roller set faster, only in conjunction with rotation and measurement direction reversal



PC-connection kit:
- ☐ To connect the E-Box with PC and software display
- ☐ Special for german market: included asa-live stream for german HU §29 StVO

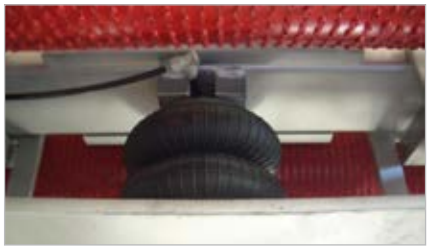

Roller set raising:
- ☐ To rais up the roller set 80 mm (max. lifting force 1,2 t)
- ☐ Including control

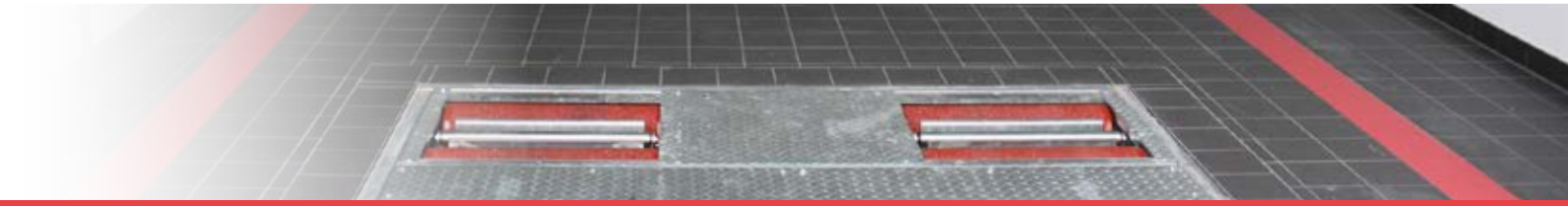



Cover plate for roller:
- ☐ Available in different versions



Weighing device:
- ☐ Static and dynamic, with 4 shear force transducers

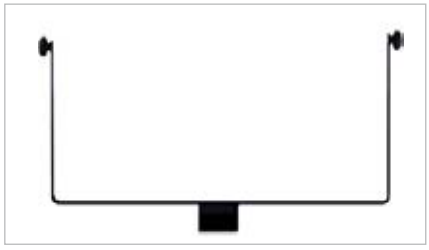

Swivle bracket:
- ☐ With star grip screw
- ☐ For all analogue display and option wall bracket

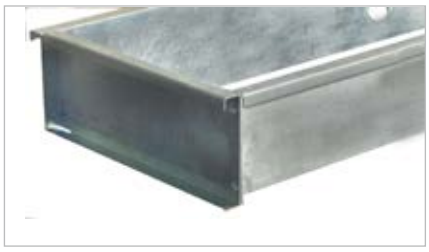

Permanent formwork:
- ☐ For all roller sets and test lanes



Base frame:
- ☐ For all roller sets oder test lanes

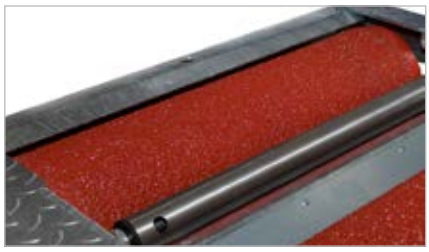

Plastic coated roller surface:
- ☐ For all roller sets

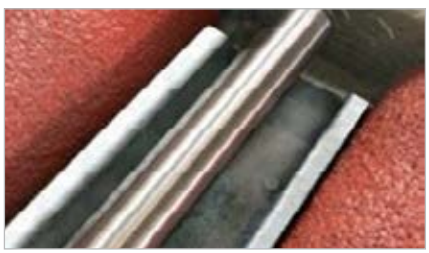

Pneumatic lowering/lifting device:
- ☐ Pneumatic driven, with weight recognition
- ☐ Optional with lift out function (max. capacity 2,2 t)



Rotation and measurement direction reversal:
- ☐ Manual, overall or counter-directional and one-wheel switching (rotary switches on E-Box)



Plug-in sleeves:
- ☐ Only for display LED
- ☐ One set included 2 plug-in sleeves for one display LED

Illustrations are not binding and optional. Under reserve of dimensional, constructional and technical modifications! Validity 07/2016









If you're looking for a customised solution ...

... then you are in the right place. We'll do it in the same way to reach perfection.

It is quite simple: The task defines the lift, and not the other way around. And the task might be for another application rather than a dealership or workshop.

This may be specific environmental conditions, or special loads that have to be moved safely and reliably. Whether lifts for existing steel cassettes, lifting platforms for working on motorcycles or other branches of industry!









If you have not succeeded in finding a solution for your particular application, then it's probably only because we do not know about your request. Please contact us today www.autopstenhoj.com.

After more than 100 years as a specialist in the development and installation of lifts we can promise you one thing: We will find a perfect solution to your problem.



Power supply at its best!

Can you just hang out and still accomplish a lot? This is actually the concept of AUTOPSTENHOJ's Powerdisc units. Our shapely power and control columns deliver a fantastic solution. Regardless of which solution you choose, we have a safe and efficient product to suit your needs!



Power Disc - many connections, future proof your installation!

- Obstacle-free working through ceiling or wall mounting
- Securely delivers electricity and compressed air to your workstation without tangling hoses meaning there are no trip hazards!r
- Network connection through computer terminals (optional)
- Including chain for suspension
- Optional adapter connector for mounting on post lifts



Power modules: green light for all your requests.

- Ceiling mounted within reach (safe headroom)
- Electricity and compressed air can be supplied directly at your workstation without tangling hoses which could be a trip hazard!
- Practical suspension with a spring, so that the module can be easily stowed away
- Network connectivity through optional computer connections
- Extensive range of optional accessories available, for example, guards to avoid damage to the customer's vehicle or holder devices for cables, hoses, hand lamps and energy pillars: fixed sizes with flexible options.



On-demand energy supply with a huge amount of different possibilities.

- Various outlets (such as Schuko or three-phase) and compressed air connections
- Integration of an existing lift control which is also possible into the column
- Network connection through IT terminals
- Safety quick coupling
- Practical storage compartments

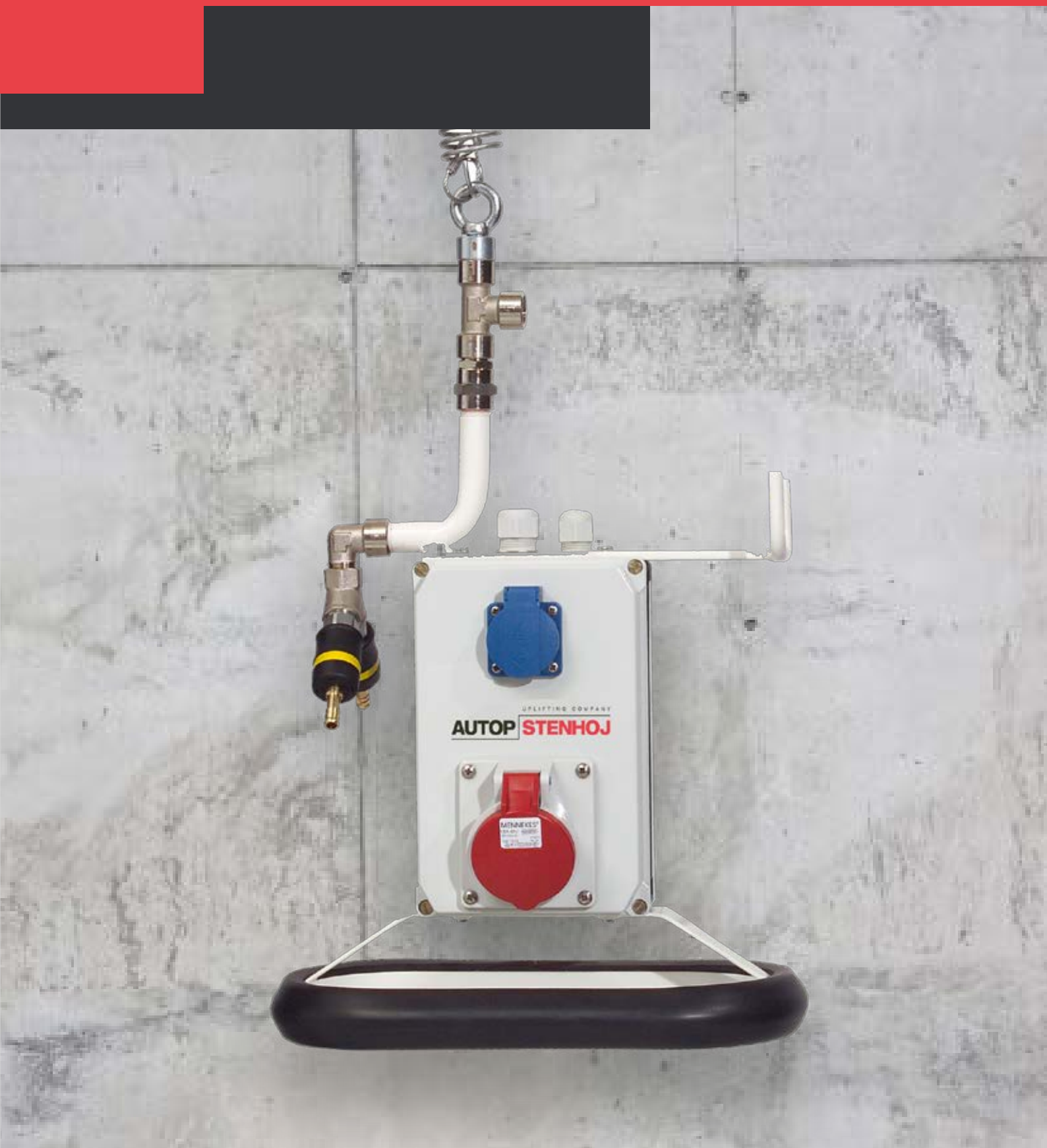
UPLIFTING COMPANY
AUTOP STENHOJ



Danke, Thanks, Merci, Gracias, Bedankt, Grazie, Tak ...

All the car manufacturers, speak different languages on the same subject: Quality. This meets with our primary objective to deliver workshop equipment of the highest quality level.

Audi, BMW, Mercedes-Benz, Jaguar, Land Rover, Opel, Porsche, Renault, Rolls-Royce, Seat, Skoda, VW and Volvo are a few of the names which trust us and have approved our products.











Incidentally, we have nearly forgotten how long we have been in collaboration with the car manufacturers. But we don't forget one thing: To thank all these car manufacturers for their reliability and for their trust in us.



UPLIFTING COMPANY

AUTOP STENHOJ

autop Maschinenbau GmbH
Sandkampstr. 90 I 48432 Rheine
+49 5971 8602-02
+49 5971 8602-25
info@autopstenhoj.com

STENHOJ A/S
Barrit Langgade 188-190 I DK-7150 Barrit
+45 76821-330
+45 76821-331
info@autopstenhoj.com