AUTO MOTIVE INDUSTRIAL a.s.

PRODUCT CATALOGUE OF THE CZECH MANUFACTURER OF HYDRAULIC LIFTS AND ACCESSORIES WITH **10 YEARS WARRANTY**

www.**automotive.cz**

SAFETY
RELIABILITY
INNOVATION





EAC ISO 9001 CE V 3148

About the company

AUTO MOTIVE INDUSTRIAL a.s.

OUR MOTTO

SAFETY
RELIABILITY
INNOVATION

DISTRIBUTION

50
COUNTRIES

WARRANTY

10
YEARS

VARIANTS

40
TYPE OF LIFTS ON OFFER

OUR VISION

To become the European leader in lifting technology for the automotive industry – combining **precision, safety and sustainability** in every detail.

OUR MISSION

We develop and manufacture innovative hydraulic lifting systems that help professionals work **safely, efficiently and with the assurance of AMI quality.**

Our goal is to bring **technologically advanced and long-term reliable solutions** that make work easier and increase productivity in every service operation.

OUR STRATEGIC GOALS

- Strengthen the international dealer network and export markets
- Launch new generations of lifting technology with an emphasis on innovation
- Continuously improve precision, quality and user safety
- Optimize production processes and digitize quality management
- Strengthen internal know-how, professional growth and team responsibility



AMI PRECISION

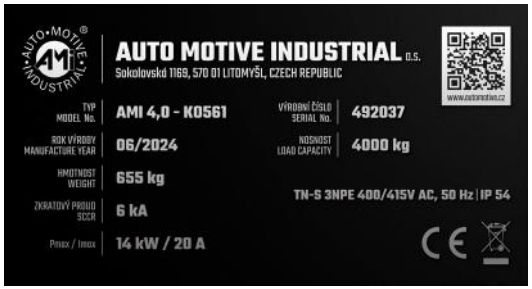

We offer

AMI PRODUCT LINES



2-POST ASYMMETRIC

HYDRAULIC LIFTS

Load capacity: **3600 kg - 4000 kg**

Application: **passenger vehicles | commercial vehicles**



2-POST SYMMETRIC

HYDRAULIC LIFTS

Load capacity: **4500 kg - 8000 kg**

Application: **passenger vehicles | commercial vehicles | trucks**



4-POST
HYDRAULIC LIFTS

Load capacity: **4000 kg - 5500 kg**
Application: **passenger vehicles | commercial vehicles**



MOBILE 1-POST
HYDRAULIC LIFTS

Load capacity: **5500 kg - 45000 kg**
Application: **trucks | buses | agro machines | trolleybuses | railway vehicles**

ELECTROMOBILITY

Superior lifting solutions

Next generation premium vehicle lifting solutions.

Wide range of accessories and add-ons (air and electric reels with the possibility of installation on both columns, integrated power supply for **WALL Boxes** for different vehicle brands).

Various solutions for lifting vehicles - **2-stage arms, 3-stage arms, double-jointed arms**, vulcanized pads, adapters.



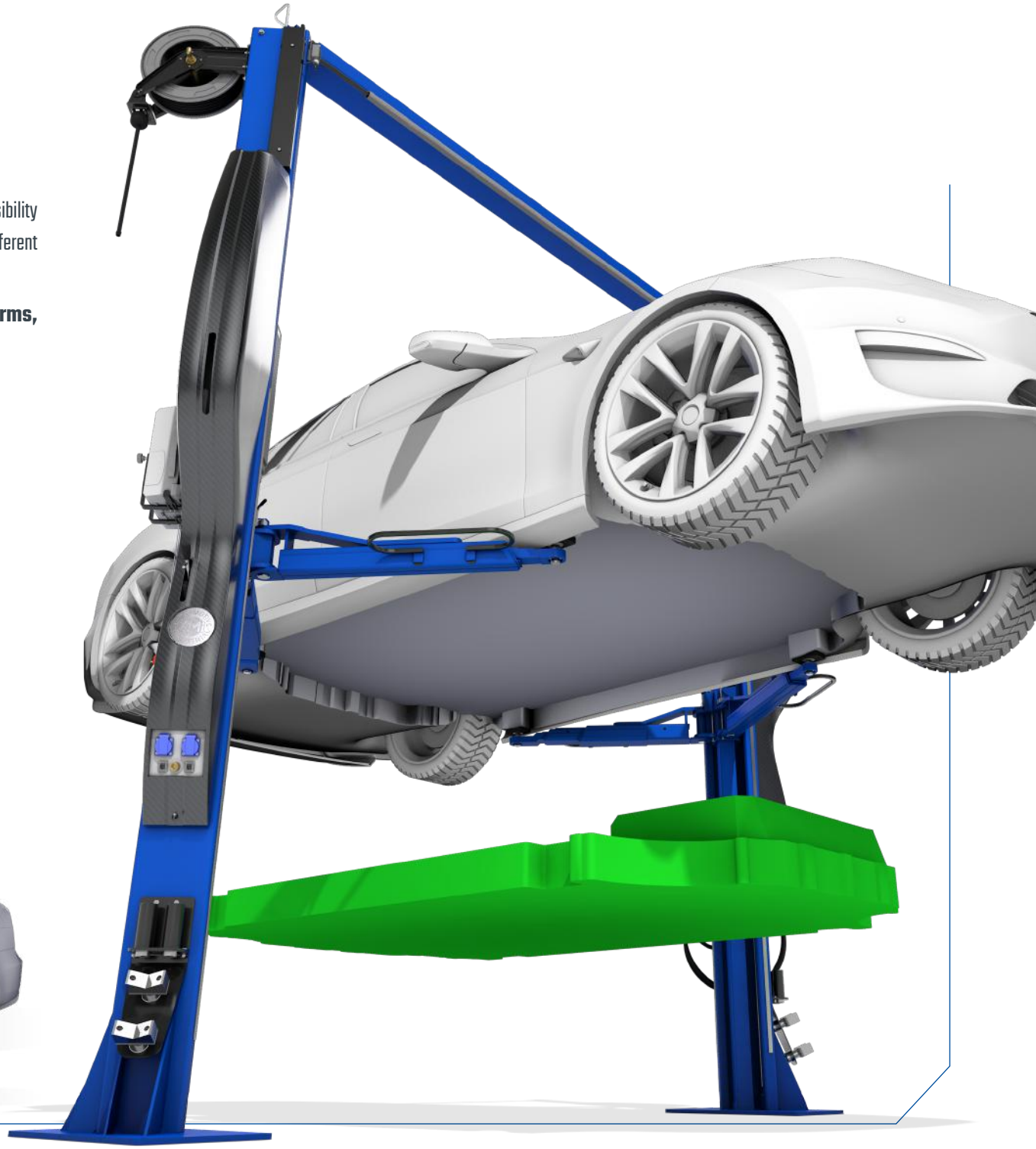

ELECTROMOBILITY | Superior lifting solutions

- Electro boxes (EB1, EB2, EB3) on columns "MASTER" | "SLAVE"
- Placing accessories on "MASTER" | "SLAVE" posts
- Vulcanized pads of different sizes and shapes
- Integrated charging connection

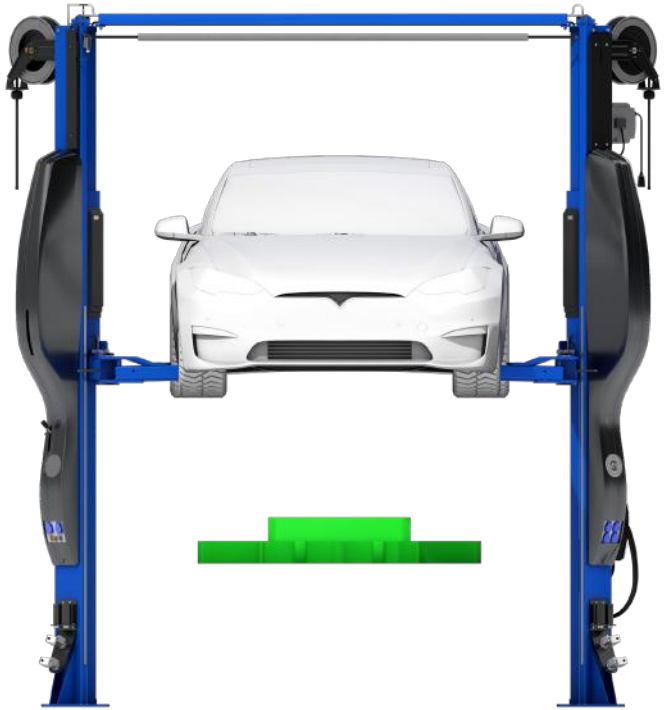





DOUBLE-JOINTED ARMS
(ACCESSORIES)

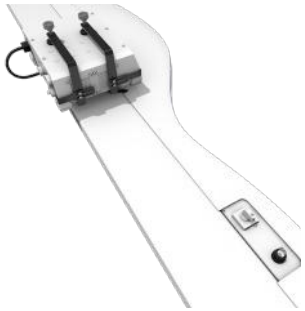

INTEGRATED MOUNTING AND POWER BATTERY CHARGING STATION
(ACCESSORIES)



INTEGRATED POWER SUPPLY FOR CHARGING STATIONS
(ACCESSORIES)



LED-LIGHTING WITH INTENSITY REGULATION
(ACCESSORIES)



AIR REELS "MASTER" | "SLAVE"
(ACCESSORIES)



ELECTRIC REELS "MASTER" | "SLAVE"
(ACCESSORIES)

HYDRAULIC 2-POST LIFTS





AMI 3,6 CLASSIC

- Load capacity 3600 kg
- Lever control
- Asymmetric design
- Economically profitable hydraulic drive
- Double-acting roof dent protection
- Set of extensions 50 mm | 100 mm
- Ergonomic cover
- Arm lock (SLS - safety locking system)
- Easy to operate
- Czech made
- Complies to requirements of ČSN EN 1493:2023 (EN 1493:2022)

Color design:

RAL 5010 | RAL 3002 | RAL 7016







2 x 2-STAGE SHORT ARMS | 2 x 2-STAGE LONG ARMS
(STANDARD)



TROLLEY COVER "PUR3"
(STANDARD)



SET OF EXTENSIONS 50 mm | 100 mm
(STANDARD)



VARIANTS OF ARM CONFIGURATIONS
(MODEL CONFIGURATIONS)

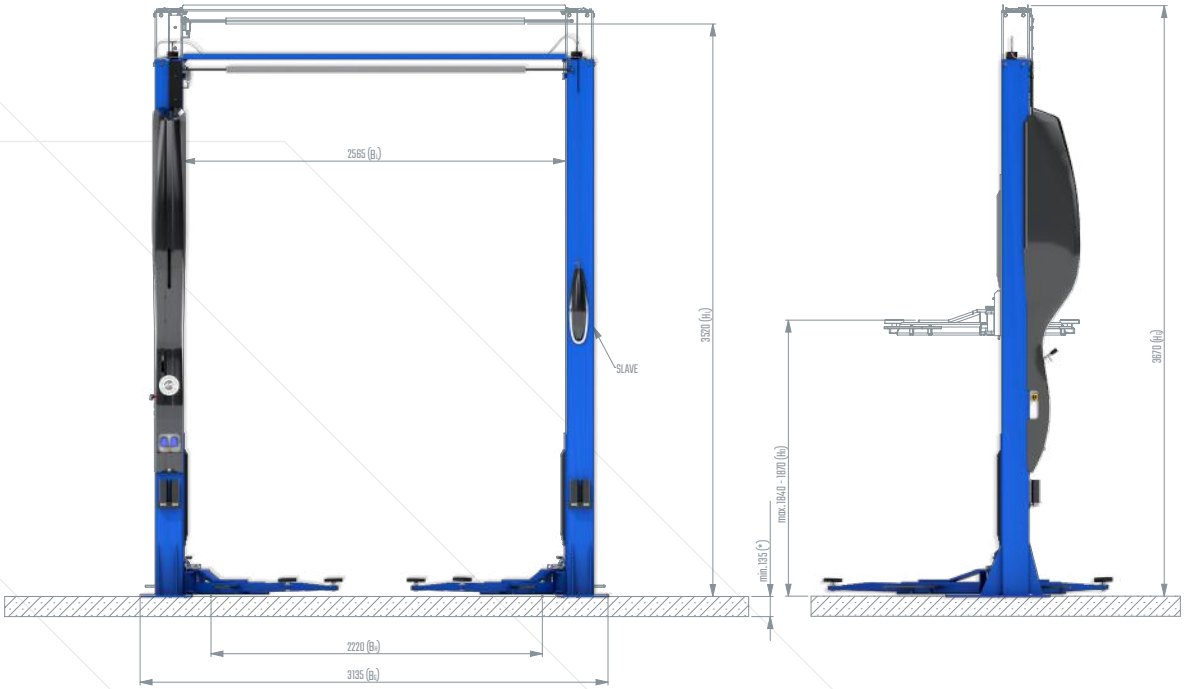



Application:
Passenger vehicles | commercial vehicles

Maximum load capacity:
3600 kg

Maximum clearance height:
3520 mm

Maximum clearance width:
2220 mm

Maximum arm height:
1840 mm - 1870 mm

Minimum arm height:
90 mm - 120 mm

Column clearance:
2565 mm

Overall width:
3135 mm

Total height:
3670 mm

Motor power:
3,0 kW

Minimum thickness of concrete floor C20/25:
135 mm



LED-LIGHTING ADHZ WITH INTENSITY REGULATION | ASYMETRIC
(ACCESSORIES)



VARIANTS OF ELECTRO BOXES
(ACCESSORIES)



VARIANTS OF VULCANISED PADS AND ADAPTERS
(ACCESSORIES)



ELECTRIC REELS "MASTER" | "SLAVE"
(ACCESSORIES)

TECHNICAL DATA

ADDITIONAL ACCESSORIES

HYDRAULIC 2-POST LIFTS

AMI 4,0 VARIANT

- Load capacity 4000 kg
- Lever control
- Asymmetric design
- Economically profitable hydraulic drive
- Double-acting roof dent protection
- Different height variants 3670 mm | 4000 mm | 4200 mm | 4400 mm | 4650 mm
- Set of extensions 50 mm | 100 mm
- Ergonomic cover
- Arm lock (SLS - safety locking system)
- Easy to operate
- Czech made
- Complies to requirements of ČSN EN 1493:2023 (EN 1493:2022)

Color design:

RAL 5010 | RAL 3002 | RAL 7016







2 x 2-STAGE SHORT ARMS | 2 x 2-STAGE LONG ARMS
(STANDARD)



TROLLEY COVER "PUR3"
(STANDARD)



ARM LOCK
SLS - SAFETY LOCKING SYSTEM (STANDARD)



VARIANTS OF ARM CONFIGURATIONS
(MODEL CONFIGURATIONS)

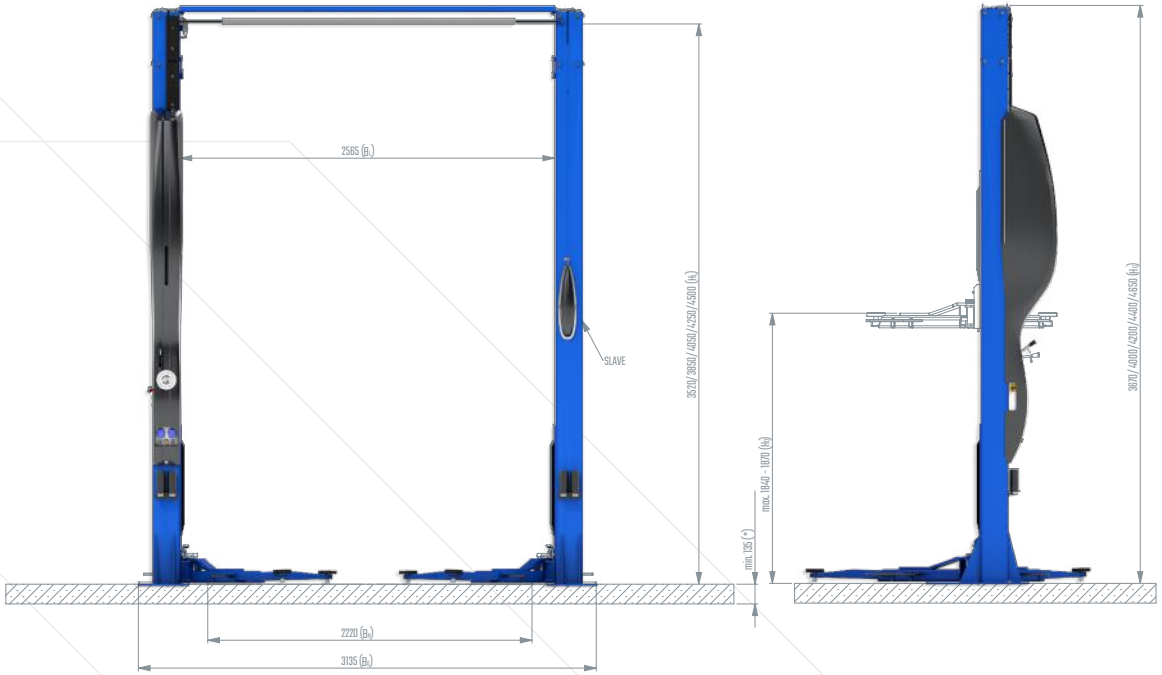



Application:
Passenger vehicles | commercial vehicles

Maximum load capacity:
4000 kg

Maximum clearance height:
3520 mm | 3850 mm | 4050 mm | 4250mm | 4500 mm

Maximum clearance width:
2220 mm

Maximum arm height:
1840 mm - 1870 mm

Minimum arm height:
90 mm - 120 mm

Column clearance:
2565 mm

Overall width:
3135 mm

Total height:
3670 mm | 4000 mm | 4200 mm | 4400 mm | 4650 mm

Motor power:
3,0 kW

Minimum thickness of concrete floor C20/25:
135 mm

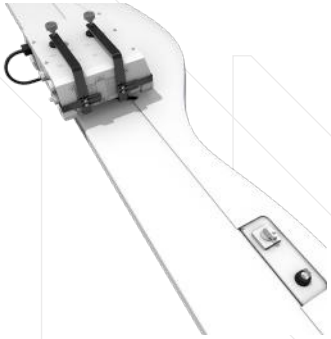

INTEGRATED MOUNTING AND POWER BATTERY CHARGING STATION
(ACCESSORIES)



VARIANTS OF VULCANISED PADS AND ADAPTERS
(ACCESSORIES)

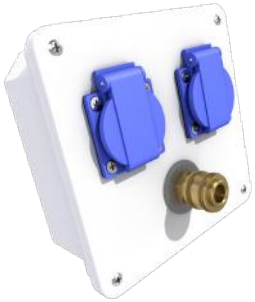

VARIANTS OF ELECTRO BOXES
(ACCESSORIES)



AIR REELS "MASTER" | "SLAVE"
(ACCESSORIES)

TECHNICAL DATA

ADDITIONAL ACCESSORIES

HYDRAULIC 2-POST LIFTS
HYDRAULIC 2-POST LIFTS

AMI 4,0 PREMIUM

- Load capacity 4000 kg
- Lever control
- Asymmetric design
- Economically profitable hydraulic drive
- Double-acting roof dent protection
- Different height variants 4100 mm | 4400 mm | 4600 mm | 4800 mm
- Maximum arm height 2040 mm
- Set of extensions 50 mm | 100 mm
- Ergonomic cover
- Arm lock (SLS - safety locking system)
- Easy to operate
- Czech made
- Complies to requirements of ČSN EN 1493:2023 (EN 1493:2022)

Color design:

RAL 5010 | RAL 3002 | RAL 7016







2 x 3-STAGE ARMS | 2 x 2-STAGE LONG ARMS
(STANDARD)



TROLLEY COVER "PUR3"
(STANDARD)



SET OF EXTENSIONS 50 mm | 100 mm
(STANDARD)

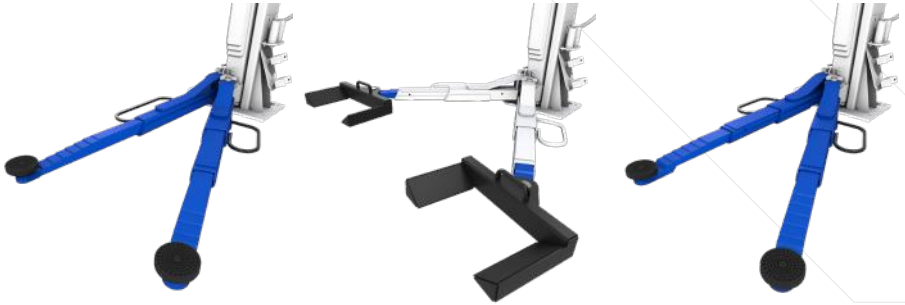

VARIANTS OF ARM CONFIGURATIONS
(MODEL CONFIGURATIONS)

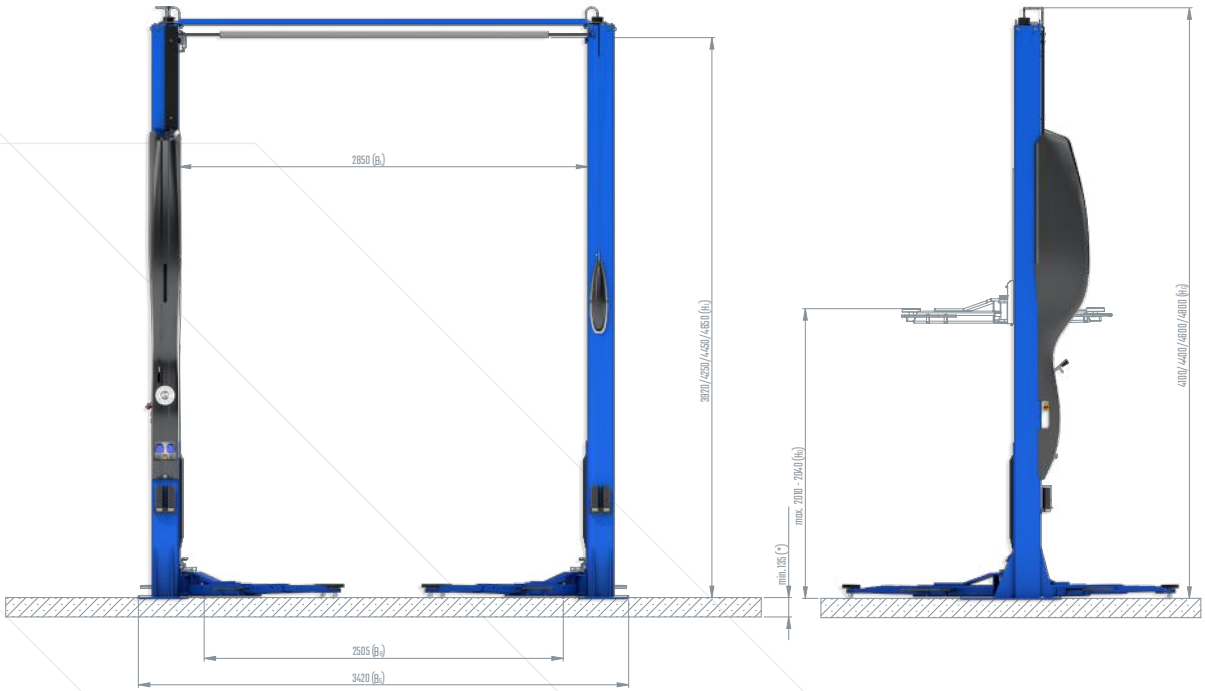



Application:
Passenger vehicles | commercial vehicles

Maximum load capacity:
4000 kg

Maximum clearance height:
3920 mm | 4250 mm | 4450 mm | 4650 mm

Maximum clearance width:
2505 mm

Maximum arm height:
2010 mm - 2040 mm

Minimum arm height:
90 mm - 120 mm

Column clearance:
2850 mm

Overall width:
3420 mm

Total height:
4100 mm | 4400 mm | 4600 mm | 4800 mm

Motor power:
3,0 kW

Minimum thickness of concrete floor C20/25:
135 mm



LED-LIGHTING ADHZ WITH INTENSITY REGULATION | ASYMETRIC
(ACCESSORIES)

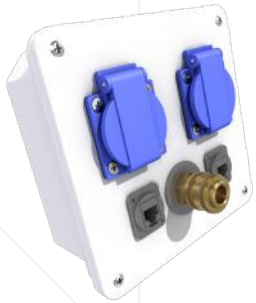

VARIANTS OF ELECTRO BOXES
(ACCESSORIES)



VARIANTS OF VULCANISED PADS AND ADAPTERS
(ACCESSORIES)



INTEGRATED POWER SUPPLY FOR CHARGING STATIONS
(ACCESSORIES)

TECHNICAL DATA

ADDITIONAL ACCESSORIES

HYDRAULIC 2-POST LIFTS
HYDRAULIC 2-POST LIFTS

AMI 4,5 EVO

- Load capacity 4500 kg
- Lever control
- Symmetric design
- Economically profitable hydraulic drive
- Double-acting roof dent protection
- Different height variants 4120 mm | 4400 mm | 4600 mm | 4800 mm | 5050 mm
- Maximum arm height 2040 mm
- Set of extensions 50 mm | 100 mm
- Ergonomic cover
- Arm lock (SLS - safety locking system)
- Easy to operate
- Czech made
- Complies to requirements of ČSN EN 1493:2023 (EN 1493:2022)





Color design:

RAL 5010 | RAL 3002 | RAL 7016



4 X 3-STAGE ARMS
(STANDARD)



TROLLEY COVER "PUR3"
(STANDARD)

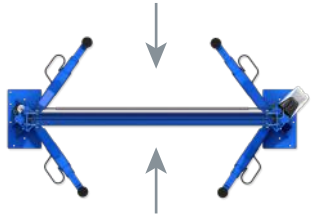

TWO-WAY VEHICLE DRIVE-IN
(STANDARD)







VARIANTS OF ARM CONFIGURATIONS
(MODEL CONFIGURATIONS)

AVAILABLE FROM 06-2026
(MODEL CONFIGURATIONS)

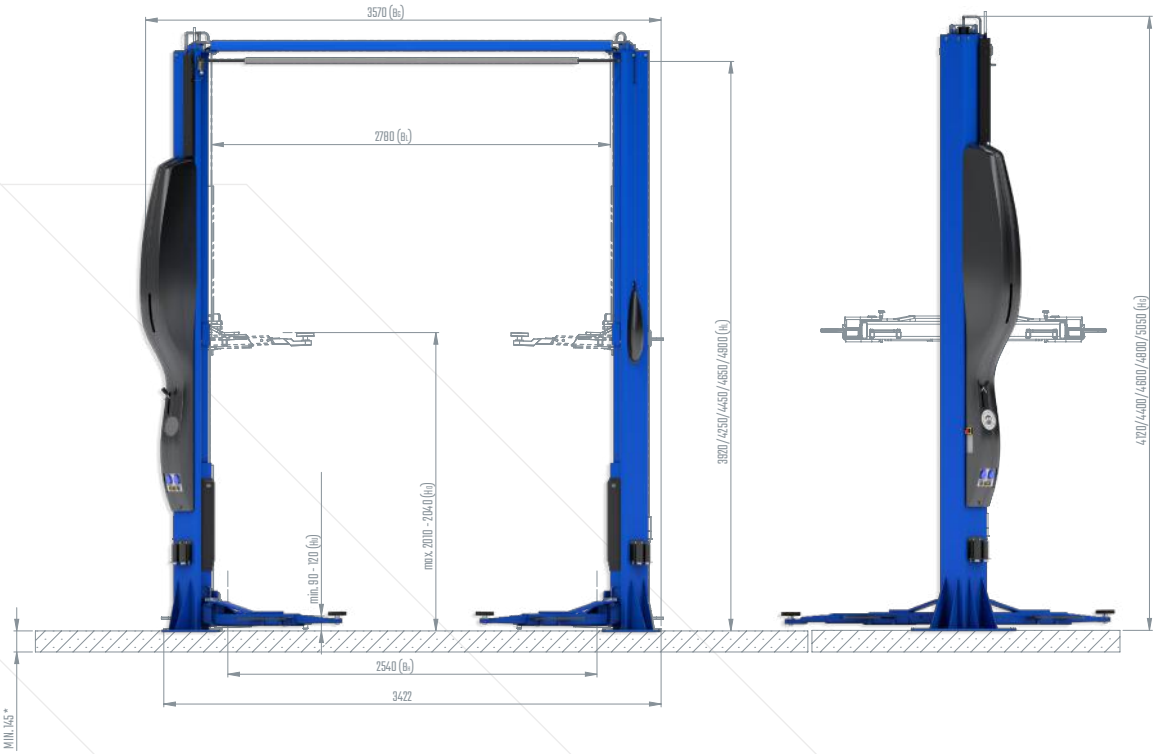

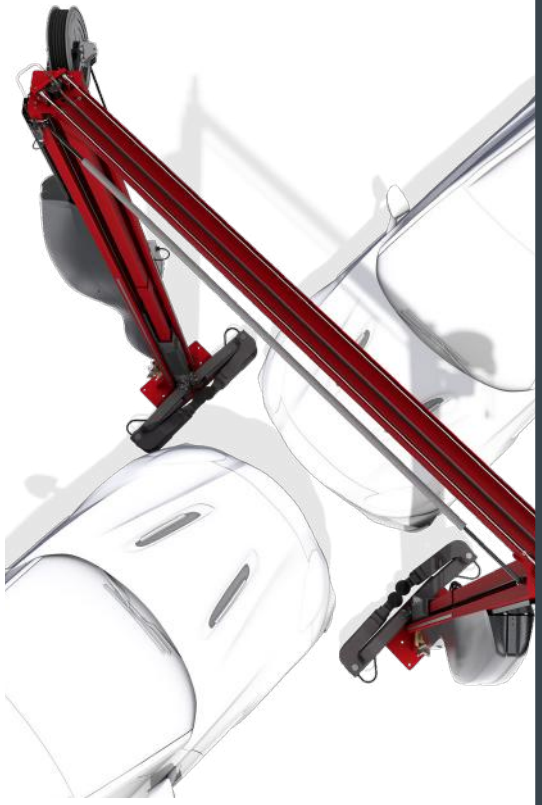

Application:
Passenger vehicles | commercial vehicles

Maximum load capacity:
4500 kg

Maximum clearance height:
3920 mm | 4250 mm | 4450 mm | 4650 mm | 4900 mm

Maximum clearance width:
2540 mm

Maximum arm height:
2010 mm - 2040 mm

Minimum arm height:
90 mm - 120 mm

Column clearance:
2780 mm

Overall width:
3570 mm

Total height:
4120 mm | 4400 mm | 4600 mm | 4800 mm | 5050 mm

Motor power:
3,0 kW

Minimum thickness of concrete floor C20/25:
145 mm



AIR REELS "MASTER" | "SLAVE"
(ACCESSORIES)



VARIANTS OF ADAPTERS
(ACCESSORIES)



ELECTRIC REELS "MASTER" | "SLAVE"
(ACCESSORIES)

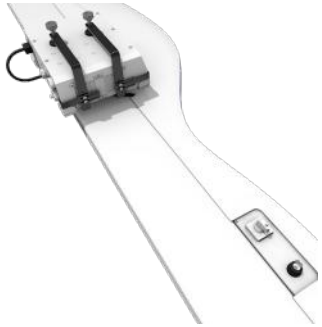

INTEGRATED MOUNTING AND POWER BATTERY CHARGING STATION
(ACCESSORIES)

TECHNICAL DATA

ADDITIONAL ACCESSORIES

HYDRAULIC 2-POST LIFTS

AMI 5,5 VAN

- Load capacity 5500 kg
- Lever control
- Symmetric design
- Economically profitable hydraulic drive
- Double-acting roof dent protection
- Different height variants 4000 mm | 4300 mm | 4600 mm | 4900 mm | 5200 mm | 5400 mm
- Set of extensions 50 mm | 100 mm
- Ergonomic cover
- Arm lock (SLS - safety locking system)
- Easy to operate
- Czech made
- Complies to requirements of ČSN EN 1493:2023 (EN 1493:2022)

Color design:

RAL 5010 | RAL 3002 | RAL 7016







4 X 3-STAGE ARMS VAN
(STANDARD)



ARM LOCK
SLS - SAFETY LOCKING SYSTEM (STANDARD)

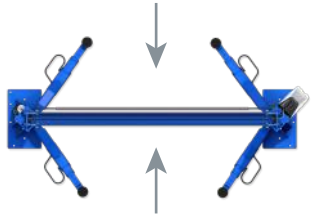

TWO-WAY VEHICLE DRIVE-IN
(STANDARD)

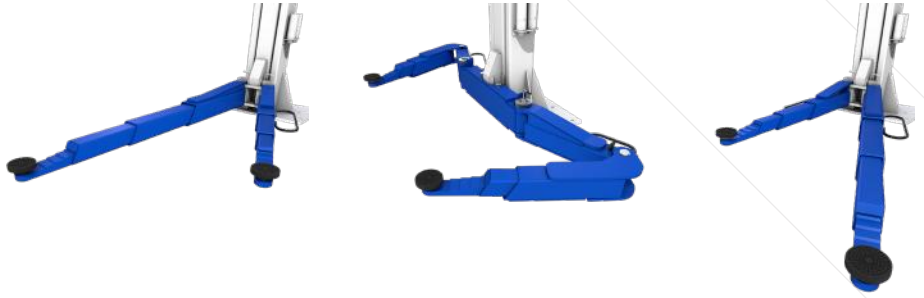

VARIANTS OF ARM CONFIGURATIONS
(MODEL CONFIGURATIONS)

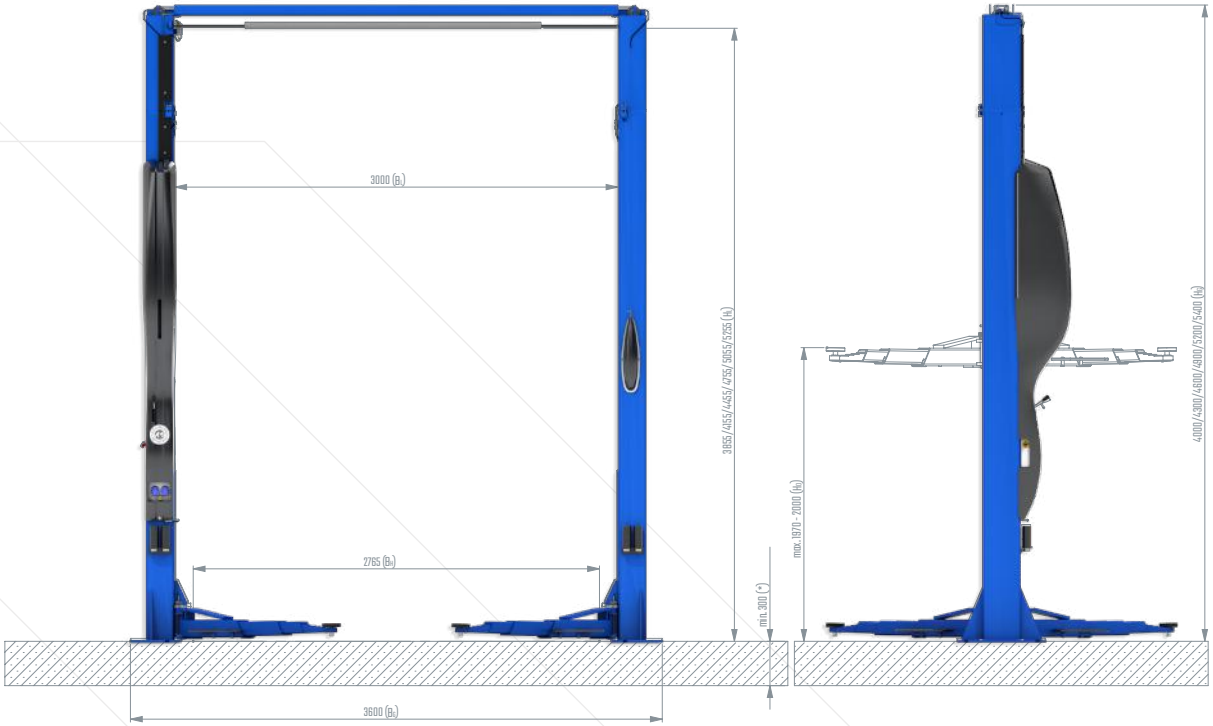



Application:
Passenger vehicles | commercial vehicles

Maximum load capacity:
5500 kg

Maximum clearance height:
3855 mm | 4155 mm | 4455 mm | 4755 mm | 5055 mm | 5255 mm

Maximum clearance width:
2765 mm

Maximum arm height:
1970 mm - 2000 mm

Minimum arm height:
128 mm - 158 mm

Column clearance:
3000 mm

Overall width:
3600 mm

Total height:
4000 mm | 4300 mm | 4600 mm | 4900 mm | 5200 mm | 5400 mm

Výkon motoru:
3,0 kW

Minimum thickness of concrete floor C20/25:
300 mm



LED-LIGHTING SDHZ WITH INTENSITY REGULATION | SYMETRIC
(ACCESSORIES)



VARIANTS OF ADAPTERS
(ACCESSORIES)

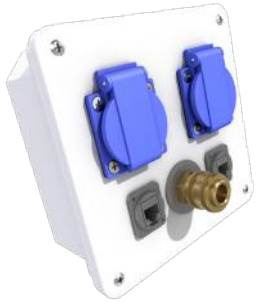

VARIANTS OF ELECTRO BOXES
(ACCESSORIES)



ELECTRIC REELS "MASTER" | "SLAVE"
(ACCESSORIES)

TECHNICAL DATA

ADDITIONAL ACCESSORIES

HYDRAULIC 2-POST LIFTS
HYDRAULIC 2-POST LIFTS

AMI 6,5 | 8,0 BUS

- Load capacity 6500 kg | 8000 kg
- Double-sided button control
- Symmetric design
- Economically profitable hydraulic drive
- Stroke count
- Double-acting roof dent protection
- Different height variants 4350 mm | 4700 mm | 5000 mm | 5200 mm | 5400 mm
- Set of extensions 60 mm | 120 mm
- Ergonomic cover
- Arm lock (SLS - safety locking system)
- Function of microfeed on the master post, allows the precise drive into the specific place
- Easy to operate
- Czech made
- Complies to requirements of ČSN EN 1493:2023 (EN 1493:2022)





Color design:

RAL 5010 | RAL 3002 | RAL 7016



4 X 3-STAGE ARMS BUS
(STANDARD)



SET OF EXTENSIONS 60 mm | 120 mm
(STANDARD)

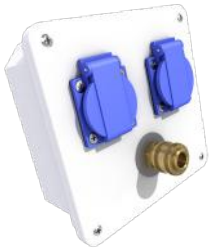

ELECTRO BOX EB 2 "MASTER" | "SLAVE"
(STANDARD)

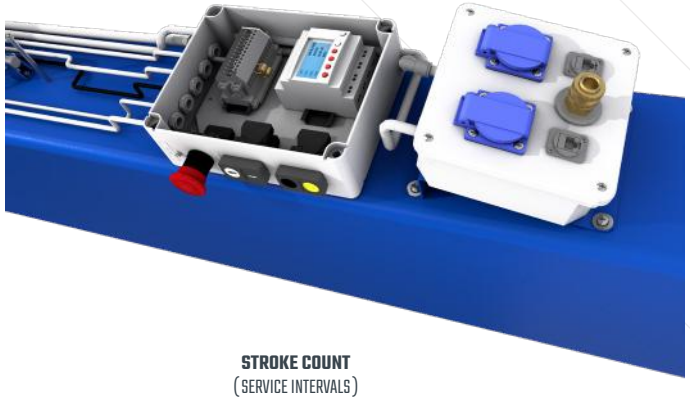

STROKE COUNT
(SERVICE INTERVALS)

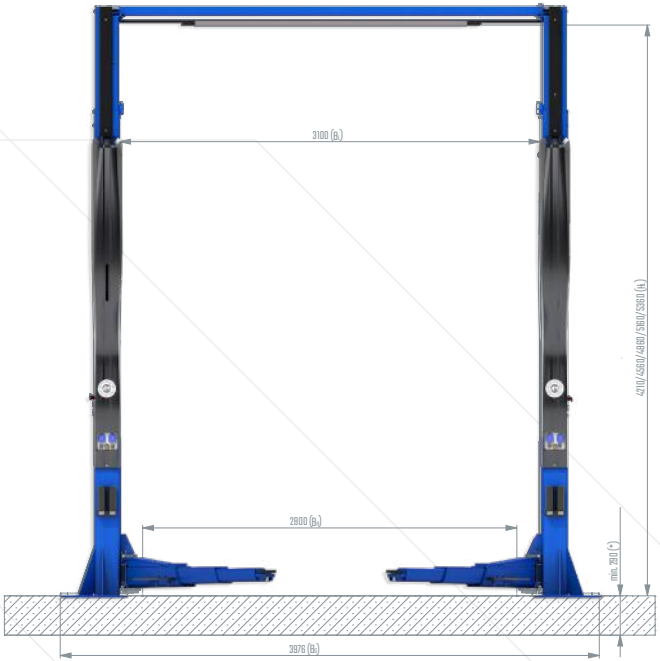

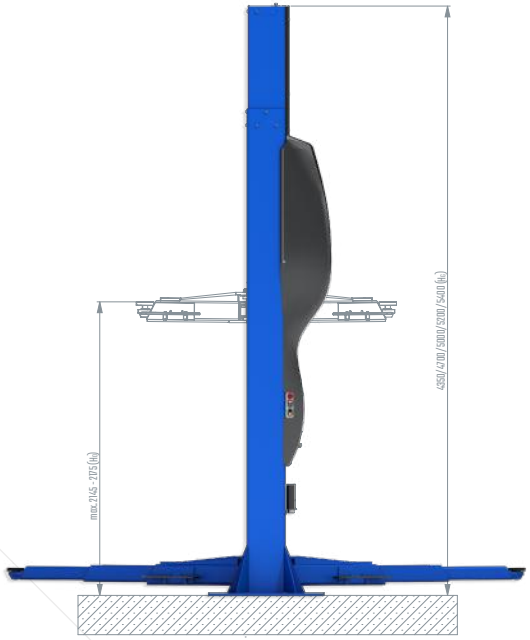



Application:
Trucks | commercial vehicles

Maximum load capacity:
up 8000 kg

Maximum clearance height:
4210 mm | 4560 mm | 4860 mm | 5160 mm | 5360 mm

Maximum clearance width:
2800 mm

Maximum arm height:
2145 mm - 2175 mm

Minimum arm height:
145 mm - 175 mm

Column clearance:
3100 mm

Overall width:
3976 mm

Total height:
4350 mm | 4700 mm | 5000 mm | 5200 mm | 5400 mm

Motor power:
3,0 kW

Minimum thickness of concrete floor C20/25:
240 mm | 290 mm



LED-LIGHTING SDHZ WITH INTENSITY REGULATION | SYMETRIC
(ACCESSORIES)



VARIANTS OF ADAPTERS
(ACCESSORIES)

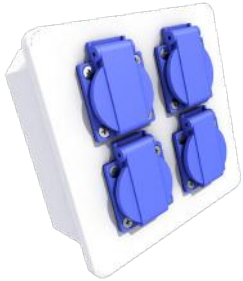

VARIANTS OF ELECTRO BOXES
(ACCESSORIES)



VARIANTS OF VULCANISED PADS AND ADAPTERS
(ACCESSORIES)

TECHNICAL DATA

ADDITIONAL ACCESSORIES

HYDRAULIC 2-POST LIFTS

HYDRAULIC 4-POST LIFT







AMI 4,0 N-WAY



Color design:

RAL 5010 | RAL 3002 | RAL 7016

- Loading capacity 4000 kg
- Designed for 3D geometry measurement
- Symmetric post design
- Variable platform distance (1000 mm ÷ 1700 mm)
- Ergonomic cover
- High stiffness and static stability
- Economically profitable hydraulic drive
- Pneumatic control of gravity latches
- Acoustic stop signalling
- Regulation of lowering speed
- Czech made
- Complies to requirements of ČSN EN 1493:2023 (EN 1493:2022)

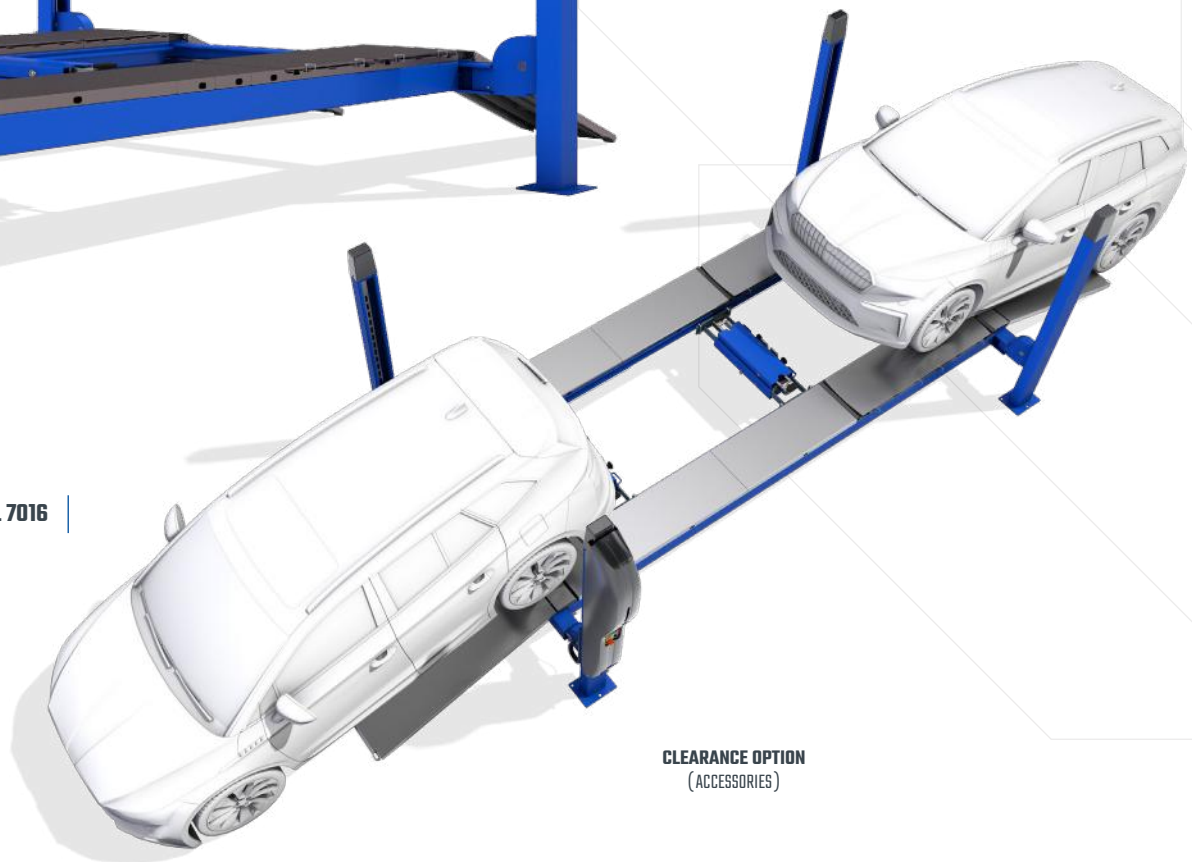

CLEARANCE OPTION
(ACCESSORIES)

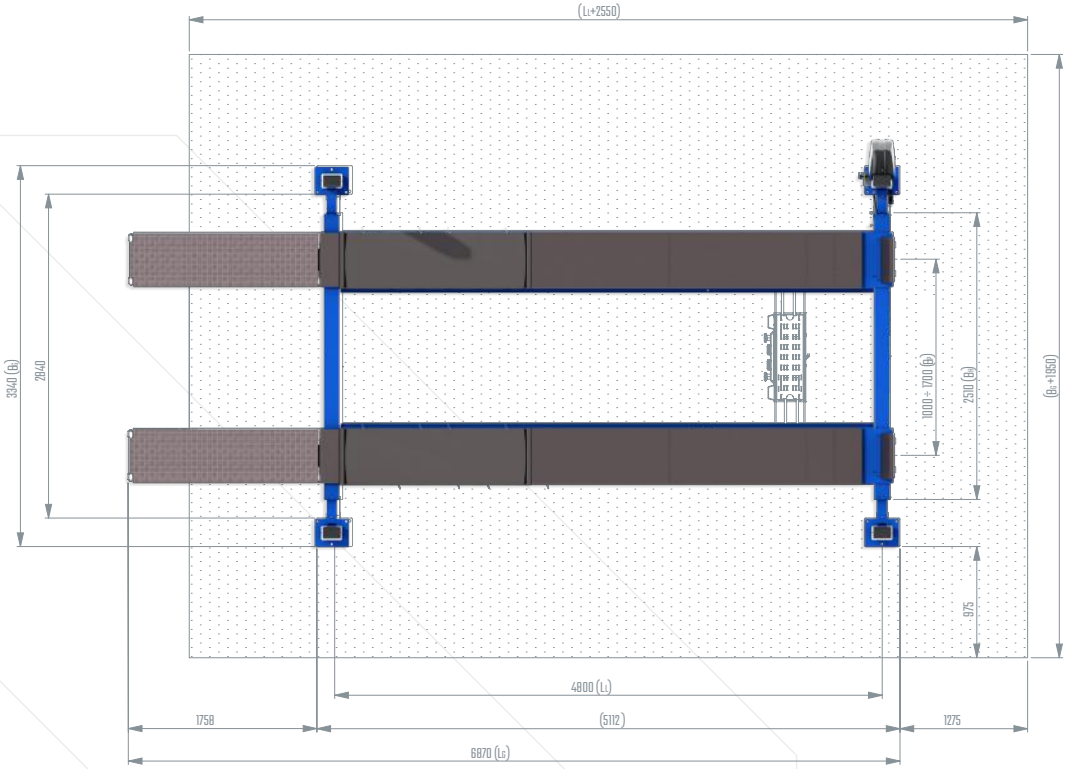



Application:
Passenger vehicles | commercial vehicles

Maximum load capacity:
4000 kg

Maximum clear distance of posts:
2970 mm

Axial distance of the posts:
4800 mm

Clearance width:
2510 mm

Total height:
2440 mm

Overall width:
3340 mm

Platform width:
505 mm

Maximum height of platform:
2050 mm

Minimum height of platform:
230 mm

Motor power:
3,0 kW

Minimum thickness of concrete floor C20/25:
135 mm

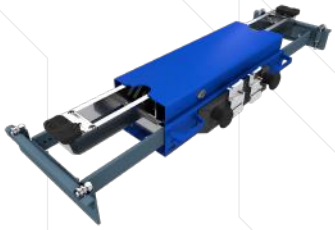

VARIANTS OF HYDRAULIC JACKING BEAMS
(ACCESSORIES)



VARIANTS OF FLOATING PLATES 505 mm | 640 mm
(ACCESSORIES)

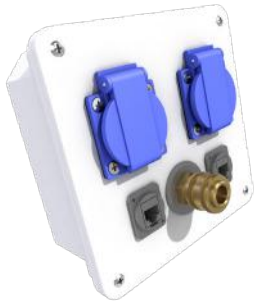

VARIANTS OF ELECTRO BOXES
(ACCESSORIES)



LED-LIGHTING ADHZ WITH INTENSITY REGULATION
(ACCESSORIES)

TECHNICAL DATA

ADDITIONAL ACCESSORIES

HYDRAULIC 4-POST LIFT

AMI 5,5 N-WAY



Color design:

RAL 5010 | RAL 3002 | RAL 7016

- Loading capacity 5500 kg
- Designed for 3D geometry measurement
- Symmetric post design
- Variable platform distance (1000 mm ÷ 1700 mm)
- Ergonomic cover
- High stiffness and static stability
- Economically profitable hydraulic drive
- Pneumatic control of gravity latches
- Acoustic stop signalling
- Regulation of lowering speed
- Czech made
- Complies to requirements of ČSN EN 1493:2023 (EN 1493:2022)

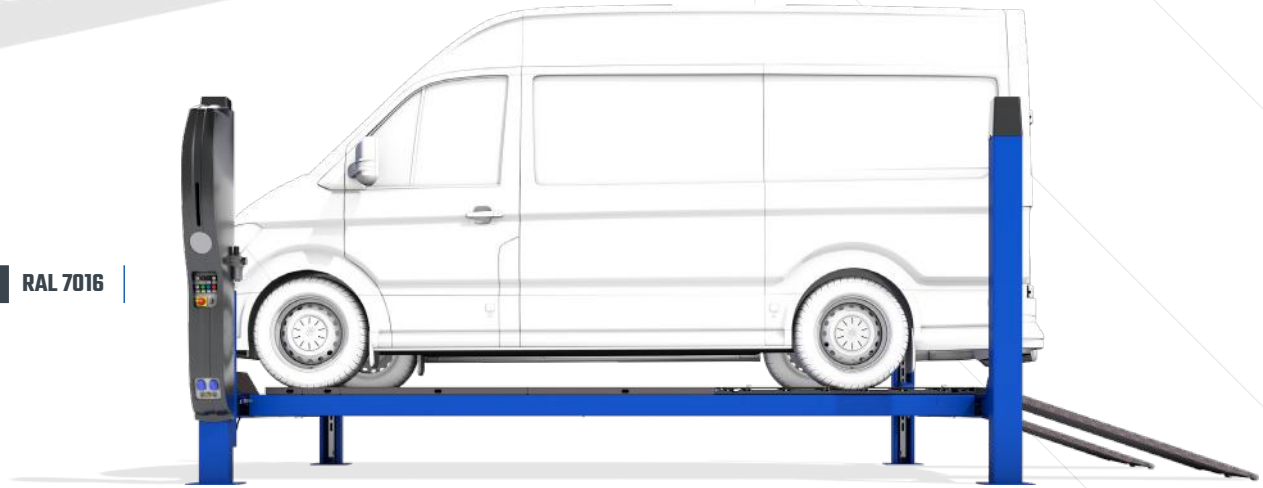

VARIANTS OF COLUMN AXIAL DISTANCES 5000 mm | 5450 mm
(ACCESSORIES)

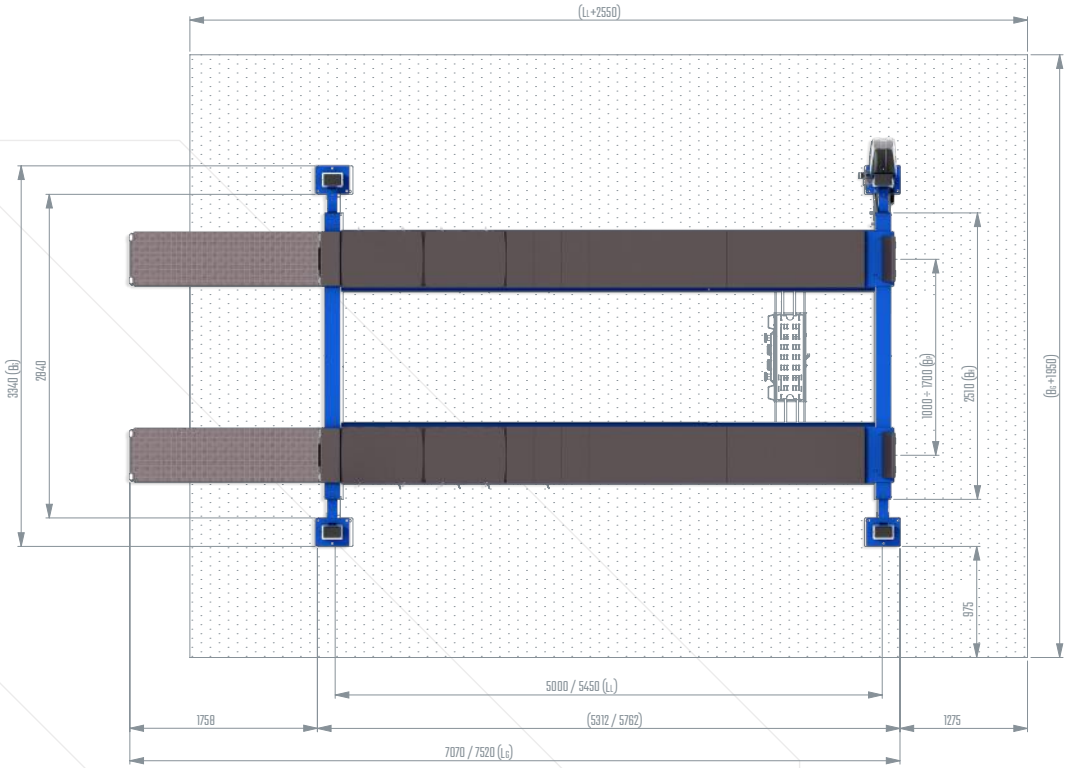

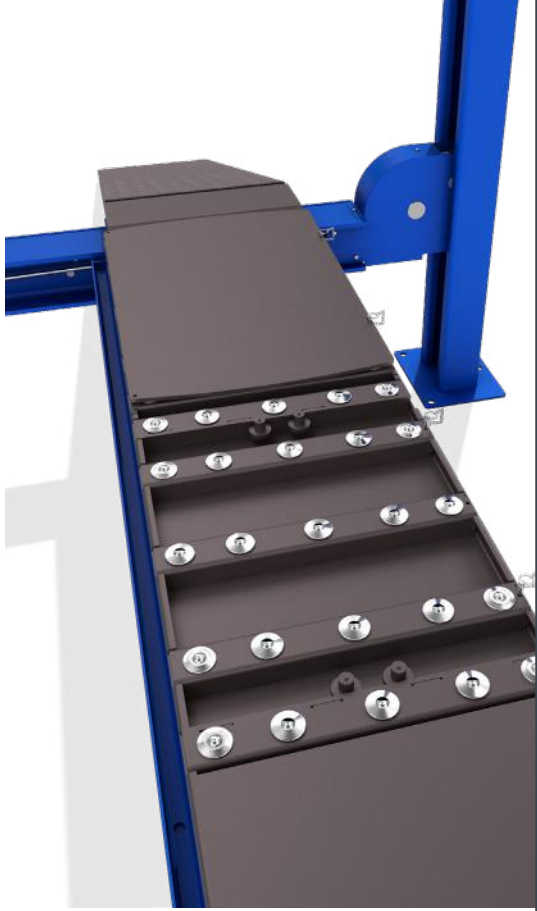

Application:
Passenger vehicles | commercial vehicles

Maximum load capacity:
5500 kg

Maximum clear distance of posts:
2970 mm

Axial distance of the posts:
5000 mm | 5450 mm

Clearance width:
2510 mm

Total height:
2440 mm

Overall width:
3340 mm

Platform width:
505 mm

Maximum height of platform:
2050 mm

Minimum height of platform:
230 mm

Motor power:
3,0 kW

Minimum thickness of concrete floor C20/25:
160 mm

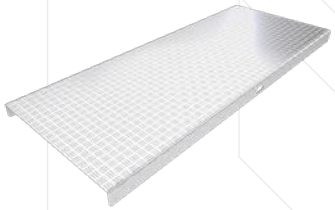

AL PLATFORM PROTECTION
(ACCESSORIES)



VARIANTS OF FLOATING PLATES
(ACCESSORIES)



VARIANTS OF ELECTRO BOXES
(ACCESSORIES)



PNEUMATIC LOCKING OF SLIPPING PLATES
(ACCESSORIES)

TECHNICAL DATA

ADDITIONAL ACCESSORIES

HYDRAULIC 4-POST LIFT

AMI J 2,0 | 2,6 | 3,2 RH | VH

- Load capacity up to 3200 kg
- Pneumatic-hydraulic and manual jacking beams
- Allows the precise drive into the specific place
- Easy to operate
- Complies to requirements of ČSN EN 1493:2023 (EN 1493:2022)

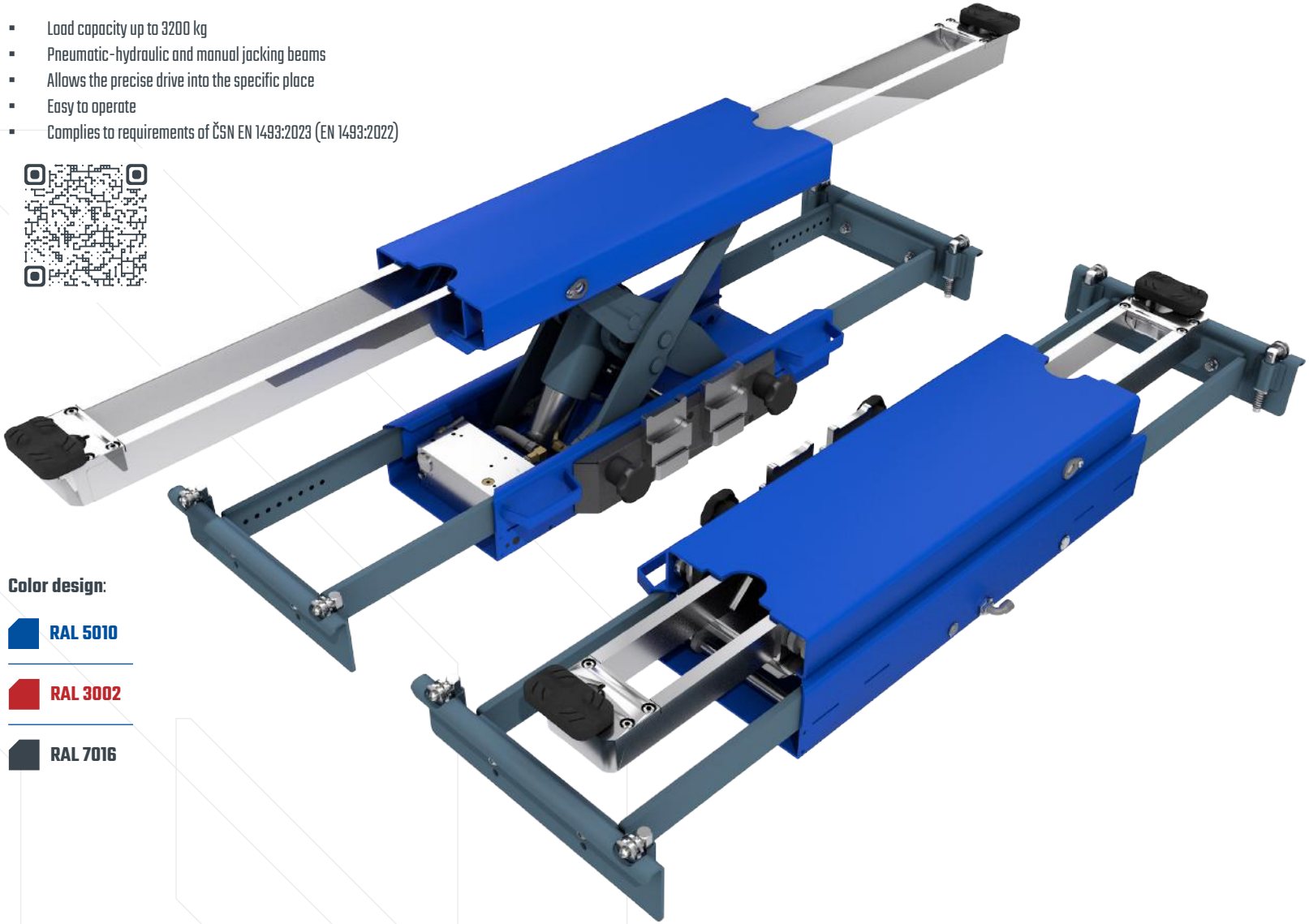

Color design:

- RAL 5010
- RAL 3002
- RAL 7016

Application:
Passenger vehicles | commercial vehicles

Maximum load capacity:
2000 kg - 3200 kg

Stroke:
250 mm

Lifting frame height:
120 mm - 160 mm

Minimum height:
180 mm - 230 mm

Span of the supporting frame:
780 mm - 1610 mm

Extended span of the supporting frame:
780 mm - 1865 mm

Weight of Jacking beam:
175 kg

Air supply:
8-10 bar

Air consumption:
400 - 700 l/min

MOBILE 4-POST HYDRAULIC LIFTS



AMI 5,5 | 7,5 TRUCK

- Load capacity of the post 5500 kg | 7500 kg
- Economically profitable hydraulic drive
- Electronic regulation and synchronisation of operation of the lift
- Integrated display with a touch screen
- Stroke count
- Possibility of remote control by means of signal from the range of 863-868 MHz (according to ETSI)
- Function of precise drive to the required height
- Acoustic signalling, report listings
- Lifting of broad range of vehicles
- Czech made
- Complies to requirements of ČSN EN 1493:2023 (EN 1493:2022)



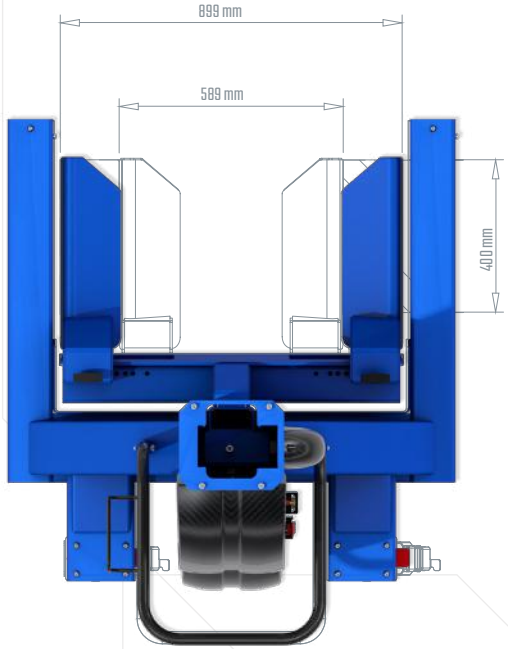

Color design:

RAL 5010 | RAL 3002 | RAL 7016



INTEGRATED DISPLAY AND ELECTRO BOX "MASTER"
(STANDARD)



CONTROL PANEL "MASTER"
(STANDARD)



MOBILE TRAVERSE
(ACCESSORIES)

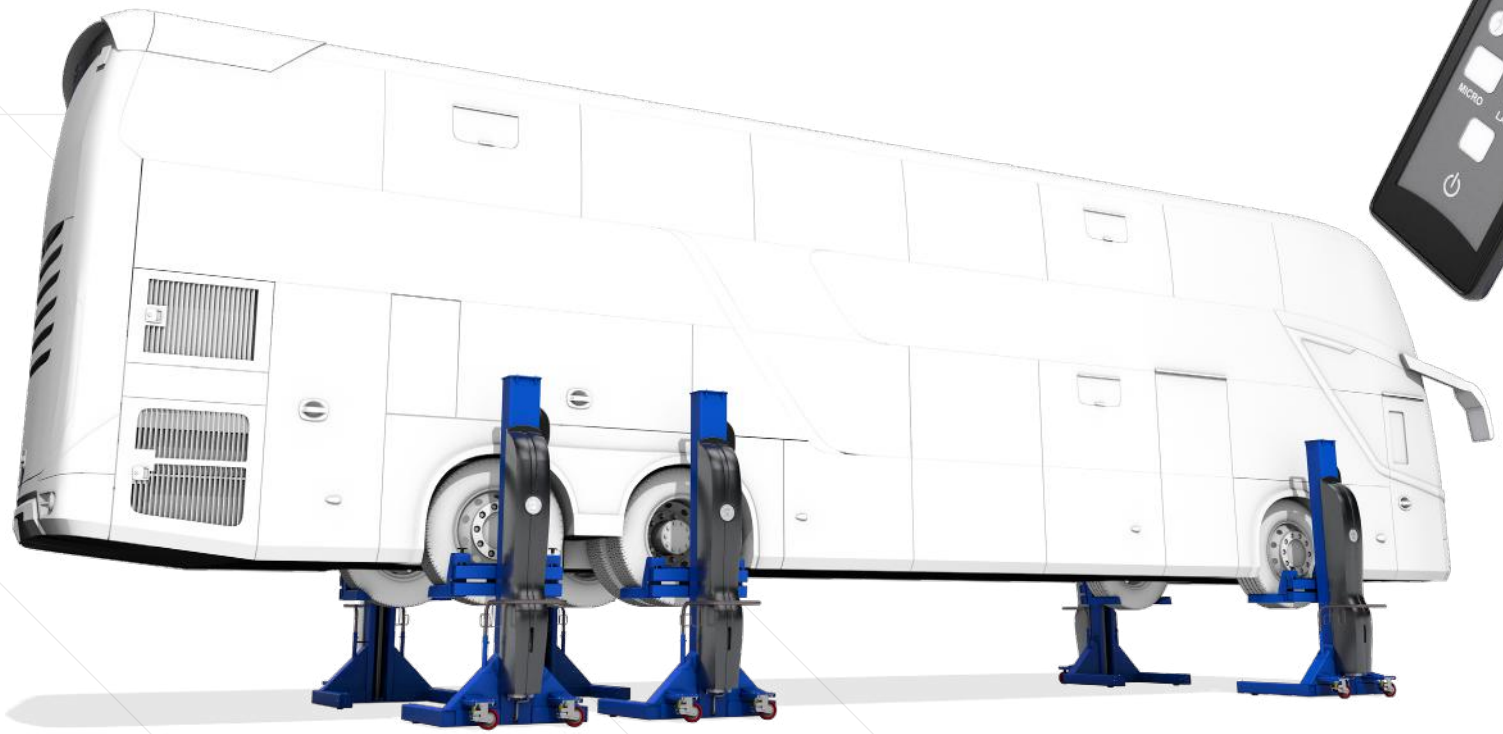







REMOTE CONTROL
(ACCESSORIES)



ELEKTROBOX "SLAVE"
(ACCESSORIES)



AGRO ACCESSORIES
(ACCESSORIES)



VARIANTS OF VULCANISED PADS AND ADAPTERS
(ACCESSORIES)

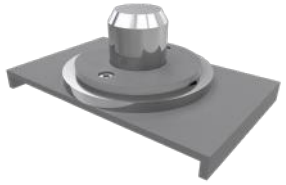

ADAPTERS FOR TRAVERSE
(ACCESSORIES)

TANDEM CONNECTION

- Automatic detection of independent sets
- Connection variants
  - Set of 4 posts+ Set of 4 posts
  - Set of 4 posts + Set of 4 posts + Set of 4 posts
  - Set of 4 posts + Set of 6 posts
  - Set of 6 posts + Set of 6 posts
- Efficient use of equipment
- Possibility of remote control



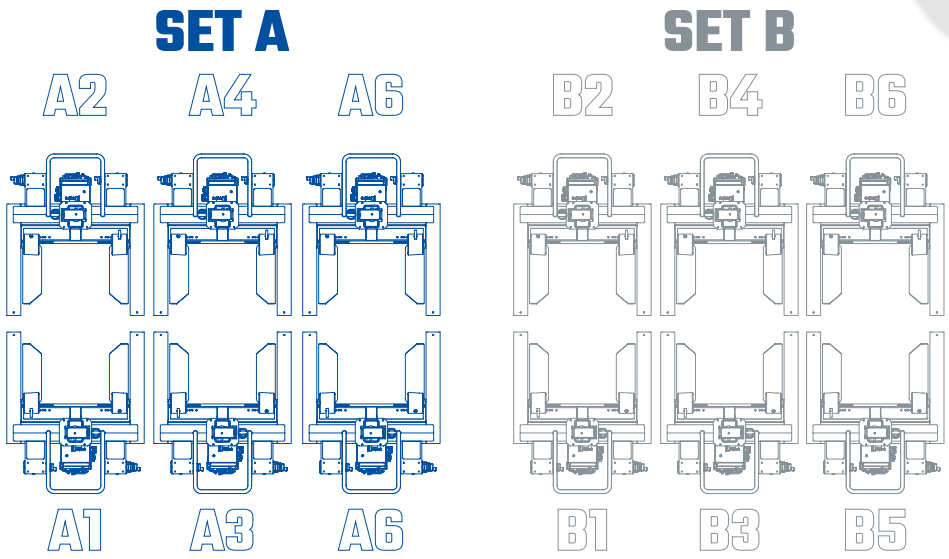

CONFIGURATION OF SETS



SETS
4 POST



SETS
6 POST



SETS
8 POST

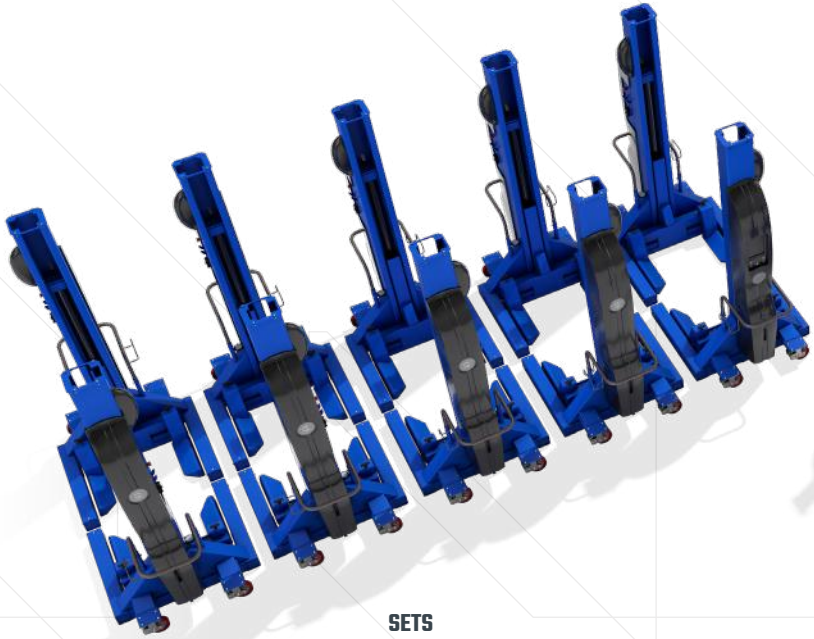

SETS
10 POST

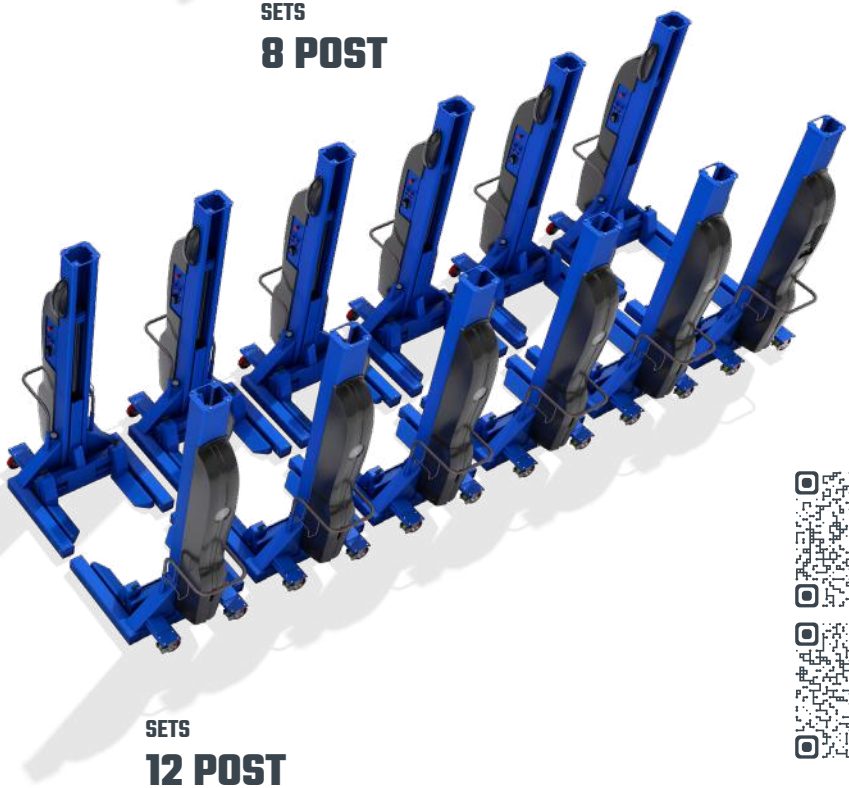

SETS
12 POST

Application:
Trucks | buses | agro machines | trolleybuses | railway vehicles

Maximum load capacity:
Up 45000 kg

Maximum stroke:
1800 mm

Maximum height of the slides:
1918 mm

Total height of the post:
2663 mm

Outside dimensions of the post
width | length | height:
1171 mm | 1376 mm | 2663 mm

Total height with maximum stroke:
3838 mm

Dimensions
of lifted tires - vehicles:
14'' - 23'' | 585 mm - 1160 mm

Dimensions
of lifted tires - agro machines:
až 32'' | 1905 mm

Motor power:
1,5 kW

Posts:
4 - 12

TECHNICAL DATA

ADDITIONAL ACCESSORIES

MOBILE 1-POST HYDRAULIC LIFT

CUSTOM PRODUCTION AMI



DESIGN VARIATIONS | COLOUR DESIGN | DIMENSIONAL ADJUSTMENTS

of AMI hydraulic lifts

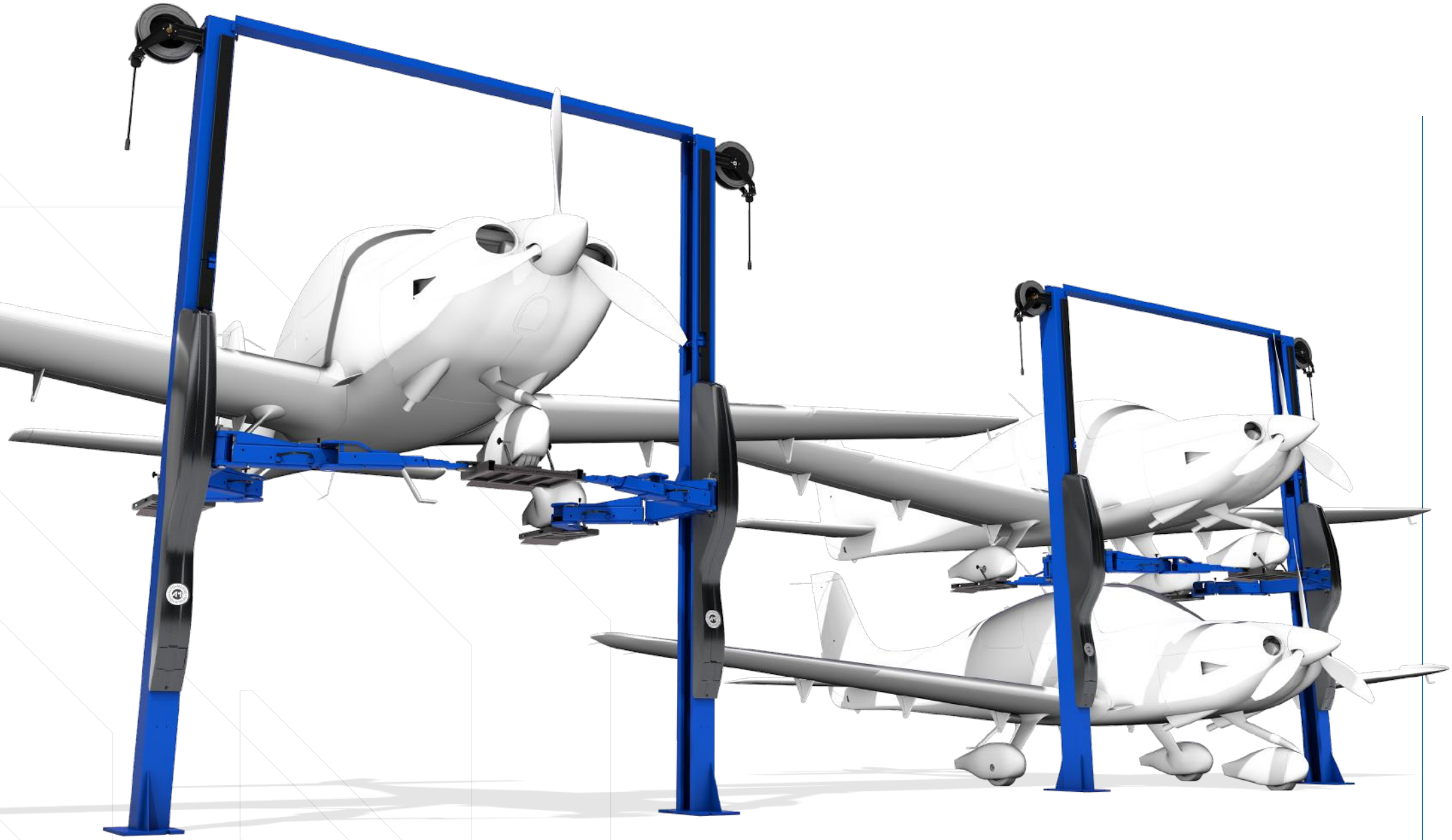

2-POST HYDRAULIC LIFT

parking system for aircraft in hangars



2-POST HYDRAULIC LIFT

into the control box



2-POST HYDRAULIC LIFT

into the washing box | explosive environment



4-POST HYDRAULIC LIFT

colour design | accessories

CUSTOM
PRODUCTION AMI

CUSTOM PRODUCTION AMI



AUTO•MOTIVE® INDUSTRIAL

CZECH MANUFACTURER OF **HYDRAULIC LIFTS**
AND ACCESSORIES WITH **10 YEARS WARRANTY**

SAFETY
RELIABILITY
INNOVATION

Sokolovská 1169, 570 01 LITOMYŠL
Czech Republic

ID: 25272420 | VAT No.: CZ25272420

Support and sales [Mo – Fr: 07:00-15:30]
+420 **461 618 555**
info@automotive.cz

www.automotive.cz